EZS®
Etiketten Thermotransferfolien Hard- und Software
IDENTTECHNIK
It´s always a good ID

CPX4D

COLOR INKJET LABEL PRINTER

Service Manual

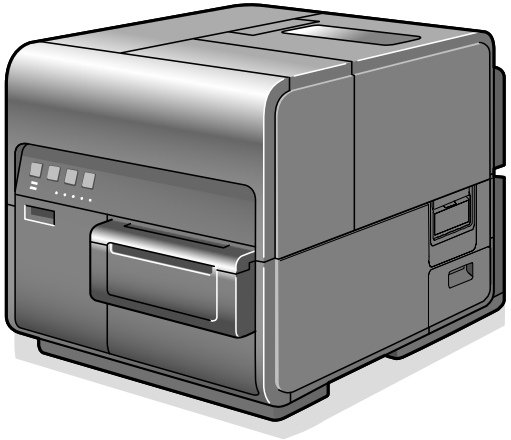

Application

This manual has been issued for qualified persons to learn technical theory, installation, maintenance, and repair of products. This manual covers all localities where the products are sold. For this reason, there may be information in this manual that does not apply to your locality.

Corrections

This manual may contain technical inaccuracies or typographical errors due to improvements or changes in products. When changes occur in applicable products or in the contents of this manual, technical information will be released as the need arises.

The following paragraph does not apply to any countries where such provisions are inconsistent with local law.

Trademarks

The product names and company names used in this manual are the registered trademarks or the trademarks of the individual companies.

Caution

Use of this manual should be strictly supervised to avoid disclosure of confidential information.

Explanation of Symbols

The following symbols are used throughout this Service Manual.

Symbols	Explanation	Symbols	Explanation
	Check.		Remove the claw.
	Check visually.		Insert the claw.
	Check the noise.		Use the bundled part.
	Disconnect the connector.		Push the part.
	Connect the connector.		Plug the power cable.
	Remove the cable/wire from the cable guide or wire saddle.		Turn on the power.
	Set the cable/wire to the cable guide or wire saddle.		
	Remove the screw.		
	Tighten the screw.		

The following rules apply throughout this Service Manual:

1. Each chapter contains sections explaining the purpose of specific functions and the relationship between electrical and mechanical systems with reference to the timing of operation.
   In the diagrams, represents the path of mechanical drive; where a signal name accompanies the symbol, the arrow indicates the direction of the electric signal.
   The expression "turn on the power" means flipping on the power switch, closing the front door, and closing the delivery unit door, which results in supplying the machine with power.

2. In the digital circuits, '1' is used to indicate that the voltage level of a given signal is "High", while '0' is used to indicate "Low". (The voltage value, however, differs from circuit to circuit.)
   In addition, the asterisk (*) as in "DRMD*" indicates that the DRMD signal goes on when '0'.
   In practically all cases, the internal mechanisms of a microprocessor cannot be checked in the field. Therefore, the operations of the microprocessors used in the machines are not discussed: they are explained in terms of from sensors to the input of the DC controller PCB and from the output of the DC controller PCB to the loads.

The descriptions in this Service Manual are subject to change without notice for product improvement or other purposes, and major changes will be communicated in the form of Service Information bulletins.
All service persons are expected to have a good understanding of the contents of this Service Manual and all relevant Service Information bulletins and be able to identify and isolate faults in the machine.

Table of Contents

Safety Precautions

Notes When Handling the Lithium Battery

Dispose of used batteries according to the instructions.

⚠ CAUTION:
Risk of explosion if battery is replaced by an incorrect type.

The following warning in the local languages is given to comply with the safety regulations in respective countries and regions.

⚠ VORSICHT:
Wenn mit dem falschen Typ ausgewechselt, besteht Explosionsgefahr. Gebrauchte Batterien gemäß der Anleitung beseitigen.

⚠ 警告
如果更換不正確之電池型式會有爆炸的風險，請依製造商說明處理用過的電池。

Power Supply

- As a general rule, do not use extension cords.
  If an extension cord must be used, however, use one for local rated voltage and over, untie the cord binding, and insert the power plug completely into the extension cord outlet to ensure a firm connection between the power cord and the extension cord.

⚠ CAUTION:
Do not plug multiple cords together to an extension cord. It may cause a fire or electrical shock.

- The socket-outlet shall be installed near the equipment and shall be easily accessible.

Notes before Servicing

⚠ CAUTION:
- At servicing, be sure to turn OFF the power source according to the specified steps and disconnect the power plug.
- If the power plug is exposed to dust, humidity, or oily smoke, the resulting buildup can prove to be a fire hazard. (The buildup of dust, for instance, can absorb moisture and suffer insulating failure.) Be sure to disconnect the power plug on a periodical basis, and remove any buildup of dust and dirt with a dry cloth.

Note at Cleaning

⚠ CAUTION:
When performing cleaning using organic solvent such as alcohol, be sure to check that the component of solvent is completely dried up before assembling.

Notes on Assembly/ Disassembly

Follow the items below to assemble/ disassemble the printer.
1. Disconnect the power plug to avoid any potential dangers during assembling/disassembling works.
2. Be sure to wear a grounding wrist strap prior to the service work to prevent electrostatic destruction of the printheads, PCB's, etc.
3. Ensure to use the right screw type (length, diameter, etc.) at the right position when assembling.
4. To keep electric conduction, binding screws with washers are used to attach the grounding wire and the varistor. Ensure to use the right screw type when assembling.
5. Unless it is specially needed, do not operate the device with some parts removed.
6. Never remove the paint-locked screws when disassembling.
7. If not specially instructed, reverse the order of disassembly to reinstall.

⚠ CAUTION:
English
CAUTION
The fuse may be in the neutral, and that the mains shall be disconnected to de-energize the phase conductors.
German
VORSICHT
Die Sicherung kann sich im Nullleiter befinden und das Hauptnetz muss abgetrennt werden, um die Phasenleiter stromlos zu machen.

1. Product Overview

Features

High Speed and Fine Quality Printing

Fine-quality printing at maximum printing speed of 200 mm/sec, at 1200 dpi for vertical scanning by 1200 dpi for horizontal scanning.

Compact / Space Saving / Light Weight

Compact, space-saving design makes for printer weight of Approx. 24Kg (53 lbs)*.
*When packed : approx. 31Kg (69 lbs)

AIS (Auto Image Shifter)

AIS function (which shifts printed images for each set of 10,000 sheets) improves Printhead longevity.

Color reproducibility

High color development with dye type ink jet.

Specifications List

Specifications

Item	Specifications
Type	Desktop color label printer
Printing method	Inkjet recording / Line print
Feeding method	Inner drive unit (Roll paper/fanfold paper-ready)
Paper reference position	Left reference
Feeding capacity	Roll paper Outside diameter : ϕ200 mm (7.87 in) or less (*1) Core diameter : ϕ76.2 ±1.0 mm (ϕ3.0 ± 0.04 in) Fanfold paper Paper feed height: 0 mm (Feeder Slot) or less to 850 mm (33.46 in)
Fusing method	Natural drying
Printing speed	Maximum printing speed : 200 mm/sec (7.87 in/sec) Preset printing speed : 200, 160, 120, 100, 90, 80, 70, 60, 50 mm/sec (7.87, 6.30, 4.72, 3.94, 3.54, 2.36, 1.97 in/sec) Default: 200 mm/sec (7.87 in/sec) When glossy paper is selected: 100, 90, 80, 70, 60, or 50 mm/sec (3.94, 3.54, 2.36, 1.97 in/sec) Default: 100 mm/sec (3.94 in/sec)
AIS(Auto Image Shift) function	Yes (default: ON) (*2) (*2) Shifts images about 0.32 mm for each set of 10,000 sheets printed.
Minimum margins	Leading and trailing edges : 1.5 mm (0.06 in) Left and right: AIS Mode ON : 2.7 mm (0.11 in) (Default) AIS Mode OFF : 2.5 mm (0.10 in) (Including separator)
Printable area	Maximum width: AIS Mode ON 105.9 mm (4.17 in) , AIS Mode OFF : 106.3 mm (4.19 in) Length : 3 to 497 mm (0.94 to 19.6 in) (Overlay function enabled, 400 mm (15.75 in) or less: 1200 dpi)
Waste ink	Collection to Maintenance Cartridge
Display panel	LCD : No SWs : 4 pcs LEDs : 8 pcs
Power ON waits time	Soft SW ON Ready: 15 sec
Fast printout time (period of time to complete printing of first page after pressing print button)	10 seconds or less (*3) (*4) (*3) 4×3 in label (*4) CPU: Intel Core 2 Quad Q6700 2.66 GHz, Memory:3 GB, HDD : 80 GB, OS : Windows XP + SP2 I/F : Hi-Speed USB
External dimensions (W×D×H)	386 x 570 x 394 mm (15.2 x 22.4 x 15.5 in) When Cutter is installed: 386 x 687 x 394 mm (15.2 x 27.0 x 15.5 in)
Weight	Approx. 24 kg (Approx. 53 lbs) (*5) (*6) (*5) Excluding Printheads and Ink Tanks. (*6) Packed state : Approx. 31 kg (69 lbs)
Working temperature and humidity ranges	Operation guaranteed environment: 5 to 35 degrees Celsius (59 to 86 degrees Fahrenheit), 10 to 90 % RH Performance guaranteed environment: 15 to 30 degrees Celsius (59 to 86 degrees Fahrenheit) , 10 to 80 % RH
Acoustic noise	Sound pressure level (Fast mode)/Bystander position 35 dB or less (On standby) 55 dB or less (printing) Sound power level: 6.3 Bels or less (printing)

Media

Item	Specifications
Media form	Dedicated roll paper (Label paper, Tag paper) Dedicated fanfold paper (Label paper)
Media type	Matte coated paper, Matte coated paper AS, Glossy paper, Glossy paper AS,Polypropylene AS
Media size	Width : 25.4 to 120.0 mm (1.00 to 4.72 in) Length : 6.0 to 500.0 mm (0.24 to 19.70 in)
Media thickness	145 to 255 µm (5.7 to 10.0 mil) (Label paper,Tag paper)

Printhead

Item	Specifications
Printheads	109.7mm (4.32 in) Thermal ink jet printhead Bk/ C/ M/ Y 4 Printhead
Print resolution	1200dpi
Number of nozzle	Number of nozzles used for printing at same time: 5,030 Number of available nozzles to discharge: 5,184 x 4 Printhead
Nozzle pitch	21.15µm

Ink Tank

Item	Specifications
Ink Tanks	Independent dedicated Ink Tank for BK, C, M and Y each. Ink type : Water-based dye ink
Ink Tank capacity	240 ml for each color (available ink volume: 230 ml) (*9) (*9) Volume of ink that come supplied with Printer : 105 ml for each color
General number of printable sheets	45,000 sheets per Ink Tank (7.5%duty/color, 4×3 in label)
Ink Tank size (W×D×H)	31 x 220 x 85 mm (1.22 x 8.66 x 3.36 in)

Maintenance Cartridge

Item	Specifications
Collection method	Waste ink is absorbed by ink absorber.
Maintenance Cartridge capacity	Near full: 360 ml (80% of full capacity) Full:450 ml
Maintenance Cartridge size (W×D×H)	132 x 268 x 52 mm (5.20 x 10.55 x 2.05 in)
Replacement frequency	Approx. 210,000 sheets (7.5% duty/color, 4 x 3 in sheets, 100 sheets × 50 jobs/day)

Power Supply

Item	Specifications
Rated input voltage	AC 100V-240V 50Hz/60Hz
Maximum power consumption	233W (Printer only) 268W (Reference value: with optional cutter)
Average power consumption	Power ON: 29 W or less Sleep mode: 8 W or less

Cleaning

Item	Specifications
Cleaning types	Maintenance jet cleaning, wipe cleaning, and tube pump type suction cleaning
Cleaning mode	Automatic cleaning At power ON, before printing, during printing, after printing etc. Manual cleaning Execute from Printer Driver, etc.

Additional Function

Item	Specifications
Self-diagnosis function	Yes
Ink detection	Yes
Ink Tanks detection	Yes (Ink Tank ROM PCB mounted)
Maintenance Cartridge detection	Yes (Maintenance Cartridge ROM PCB mounted)
Door open detection	Yes(Ink Tank Door, Upper Unit, Maintenance Cartridge Door)
Feed area paper detection	Yes
Transport area paper Detection	Yes
Jam detection	Yes
Paper width detection	Yes
Paper length detection	Yes
Sleep mode	Yes
Mechanical counter	No
Back feed	Yes (Auto/ Manual)

Others

Item	Specifications
Interface	Hi-Speed USB 10Base-T/ 100Base-TX/ 1000Base-T RS-232C upper :Barcode reader connection (*10) RS-232C lower: External device control connection Cutter connection I/F (*10) RS-232C Connector is provided for future expansion. Currently, it is not provided with any function.
Supported OS	Windows 7 SP1 / 8.1/ 10 (32bit/ 64bit)
Supported hardware	Computers recommended by the above OSs
Options	Auto Cutter

Component Names

Front View

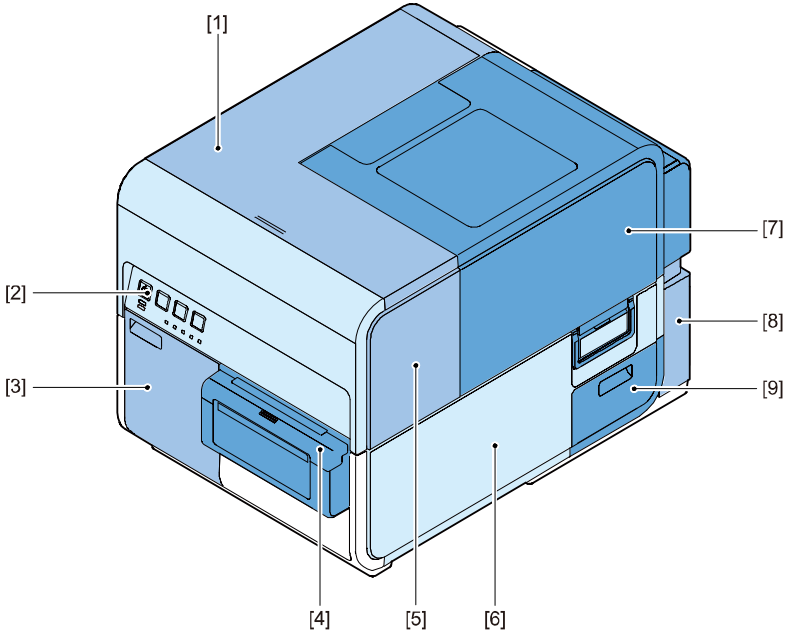

[1]	Upper Cover	[6]	Right Cover
[2]	Operation Panel	[7]	Roll Cover
[3]	Ink Tank Door	[8]	Rear Cover
[4]	Cutter Cover	[9]	Maintenance Cartridge Door
[5]	Maintenance Cover		

Rear View

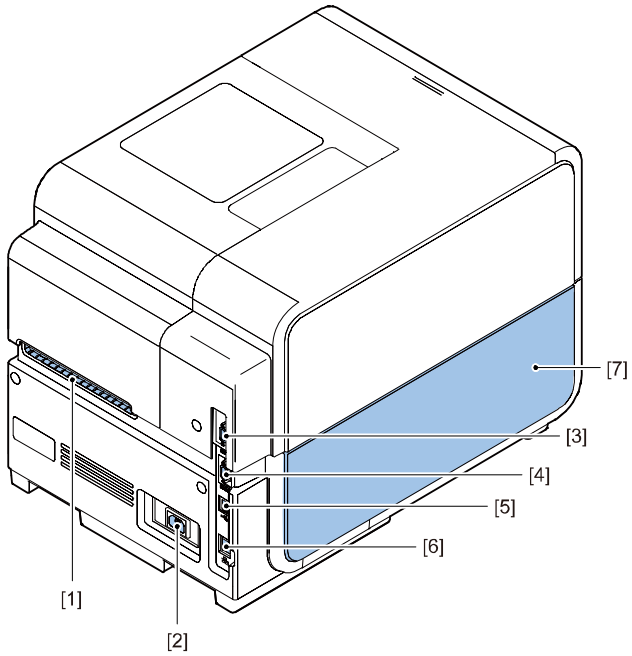

[1]	Rear Feeder Slot	[5]	USB Connector
[2]	Power Socket	[6]	LAN Connector
[3]	RS-232C Connector	[7]	Left Cover
[4]	RS-232C Connector		

Internal View (Front)

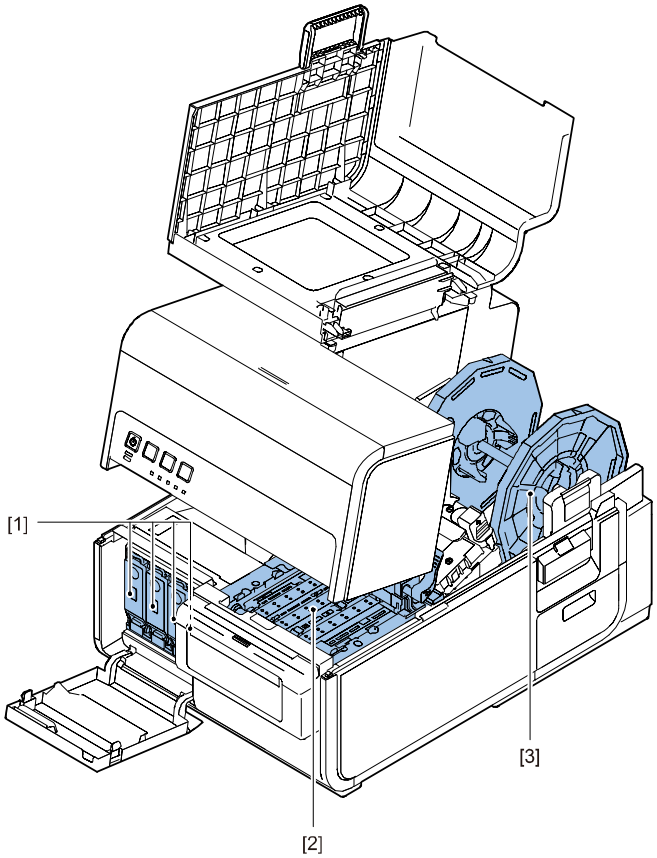

[1] Ink Tank Lever

[2] Transport Unit

[3] Roll Holder

Internal View (Rear)

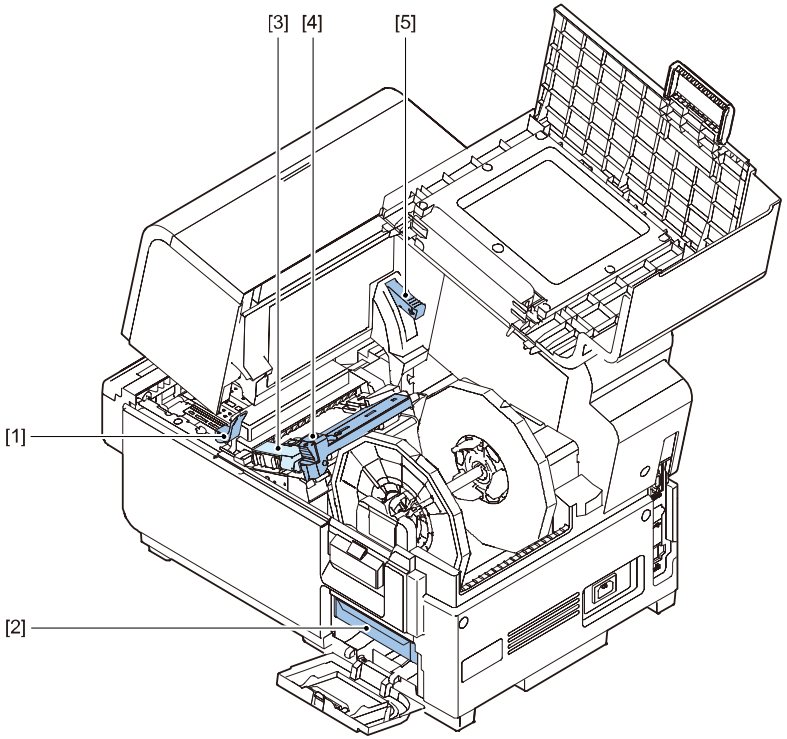

[1] Pinch Roller Release Lever

[2] Maintenance Cartridge

[3] Transport Guide

[4] Paper Guide

[5] Upper Unit Open Lever

Front Cross-sectional View

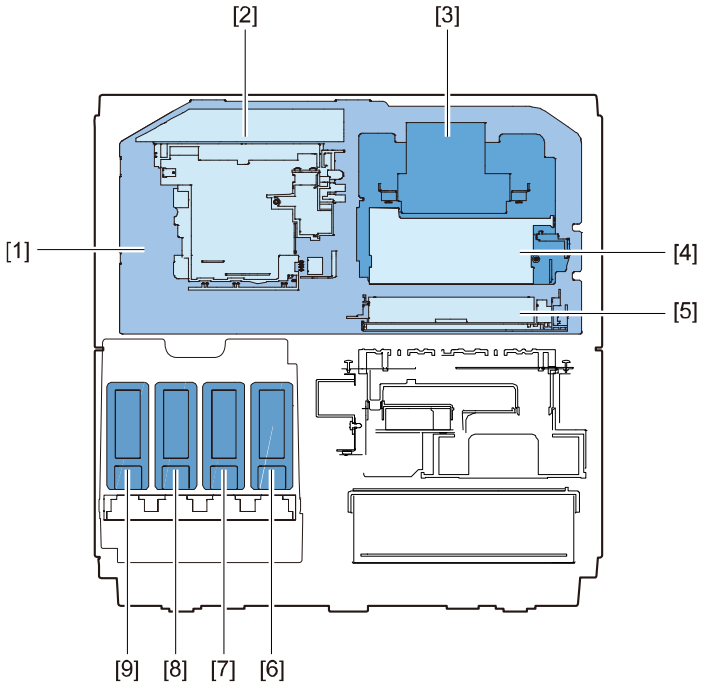

[1]	Print Module	[6]	Yellow Ink Tank
[2]	Pump Unit	[7]	Magenta Ink Tan
[3]	Printhead Lifter Part	[8]	Cyan Ink Tan
[4]	Printhead	[9]	Black Ink Tan
[5]	Purge Unit		

Horizontal Cross-sectional View

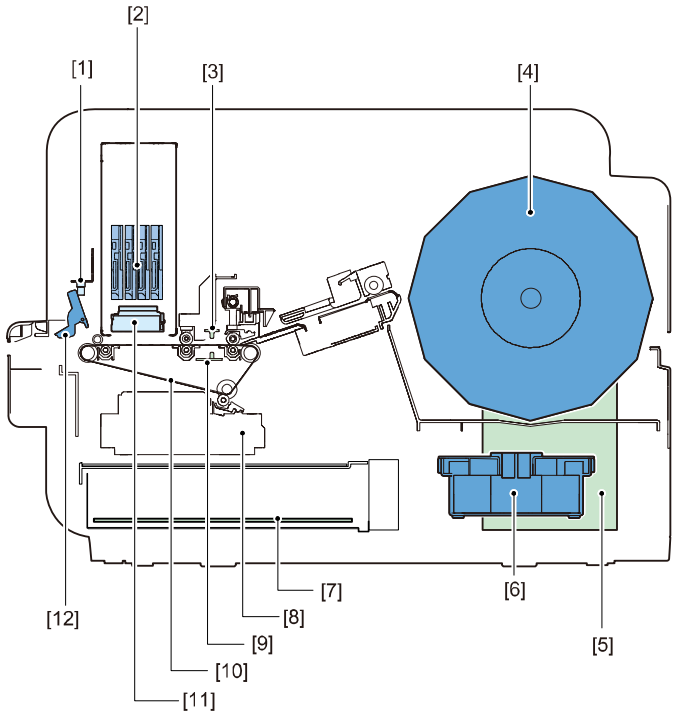

[1]	Transport Sensor	[7]	DC Power Supply PCB Unit
[2]	Printhead	[8]	Paper Suction Fan
[3]	Upper TOF Sensor PCB	[9]	Lower TOF Sensor PCB
[4]	Roll Holder	[10]	Transport Belt
[5]	Printer Controller PCB	[11]	Purge Unit
[6]	Maintenance Cartridge	[12]	Transport Sensor Flag

Operation Panel

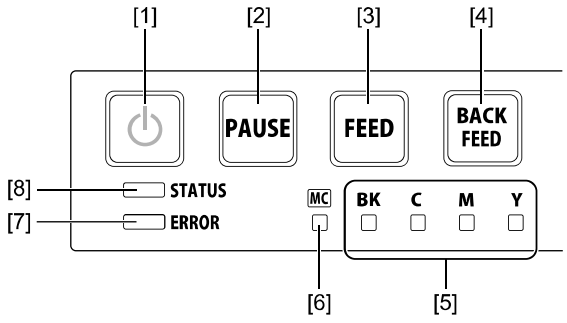

[1]	Power Key
[2]	[PAUSE] Key
[3]	[FEED] Key
[4]	[BACK FEED] Key
[5]	Ink Warning Lamp
[6]	Maintenance Cartridge Lamp
[7]	[ERROR] Lamp
[8]	[STATUS] Lamp

2. Technology

Basic Configuration

Functional Configuration

This Printer mainly consists of 3 systems: Image Formation System, Ink Supply System, and Feeder/Transport System.

Image Formation System

Image Formation System discharges ink from Printheads based on the print data to form a print image on paper. It consists of Printheads, Printhead Lifter Part, and Purge Unit in Print Module.

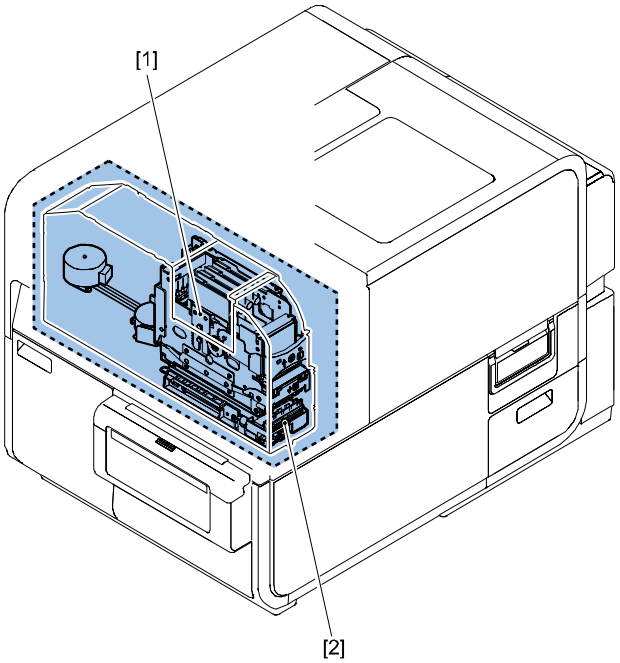

[1] Printhead Lifter Part

[2] Purge Unit

Ink Supply System

Ink Supply System supplies ink from Ink Tank to Printheads, suctions ink from Printheads, and collects waste ink from Purge Unit to Maintenance Cartridge. It consists of Ink Tank Holder Unit, Valve Unit, and Pump Unit in Print Module.

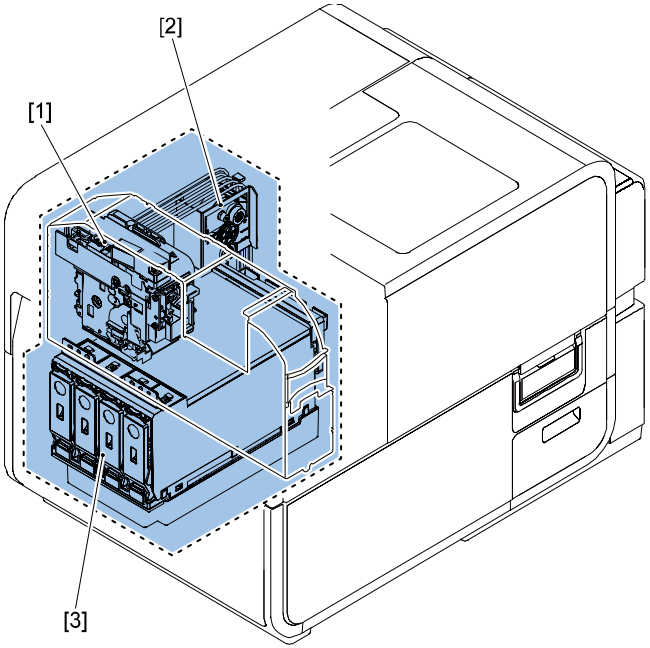

[1] Pump Unit

[2] Valve Unit

[3] Ink Tank Holder Unit

Feeder/Transport System

Feeder/Transport System feeds paper. It consists of Roll Drive Unit, Paper Guide Unit and Transport Unit.

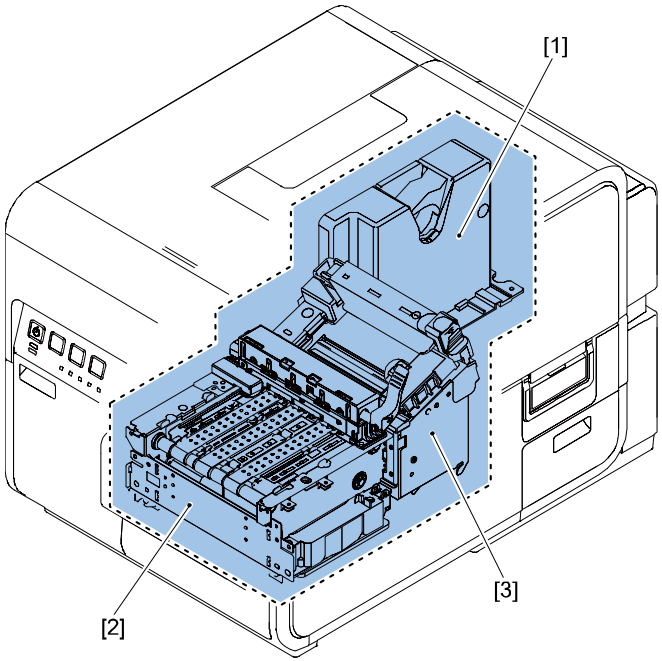

[1] Roll Drive Unit

[2] Transport Unit

[3] Paper Guide Unit

Outline of Electrical Circuits

Main electric circuits of this Printer include Printer Controller PCB and DC Power Supply PCB.
Main control of this Printer is performed by the microcomputer installed on Printer Controller PCB.
Printer Controller PCB performs image processing for the print data spooled from the host computer, and controls Printheads to print an image on a paper according to the processed print data.
Main functions of these PCBs are as follows:

1. Printer Controller PCB
   Printer Controller PCB performs communication with the host computer to manage printing. It controls printing and cleaning operation using a microcomputer and ASIC.
   It performs image processing for print data and performs all kinds of control related to Printheads.
   It has Flash ROM to allow to rewrite software using a PC.

   - Image data management
   - Control of motors, solenoids, clutches, sensors, fans, and switches
   - Management of temperature and humidity data
   - Control of DC Power Supply PCB output
   - Command data analysis
   - Overlay data retention
   - Communication with host computer (3 types of interfaces)
   - Print data transfer to image memory
   - Control of operation on Operation Panel
   - Power supply to Operation Panel
   - Control of transfer of image data to Printhead

2. DC Power Supply PCB
   Printer is equipped with universal-type DC Power Supply PCB to generate +24 V and +5 V from 100-240 VAC, and supplies them to Printheads, motors, and solenoids.

Block diagrams of main circuits of Printer are shown below.

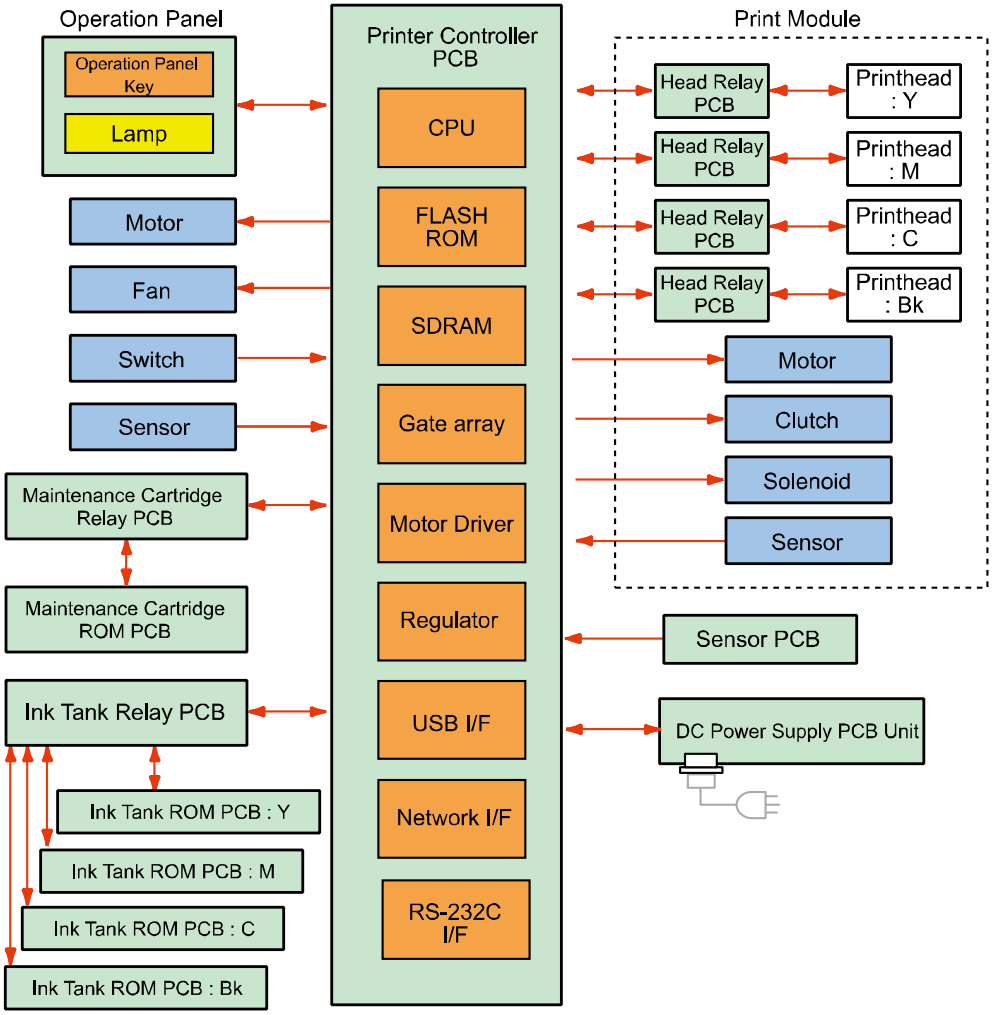

Drive Configuration

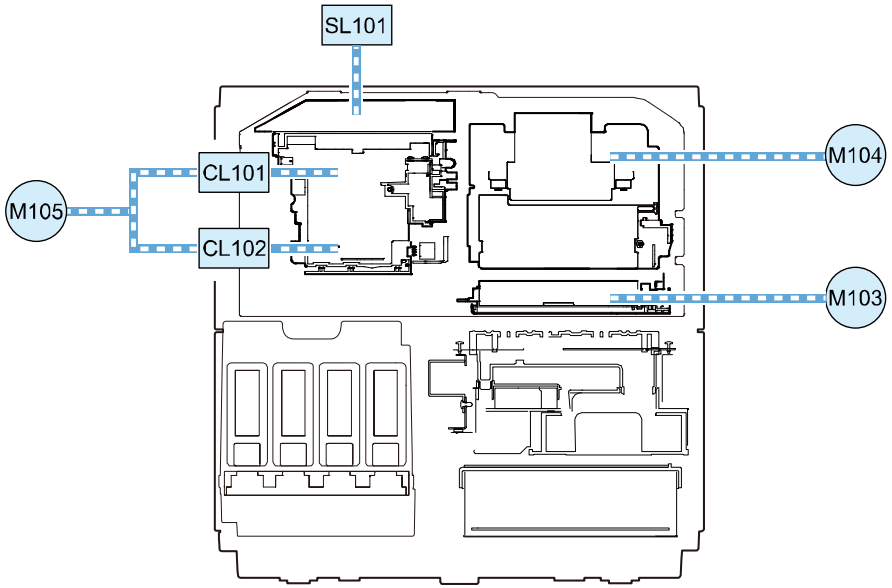

FRONT VIEW

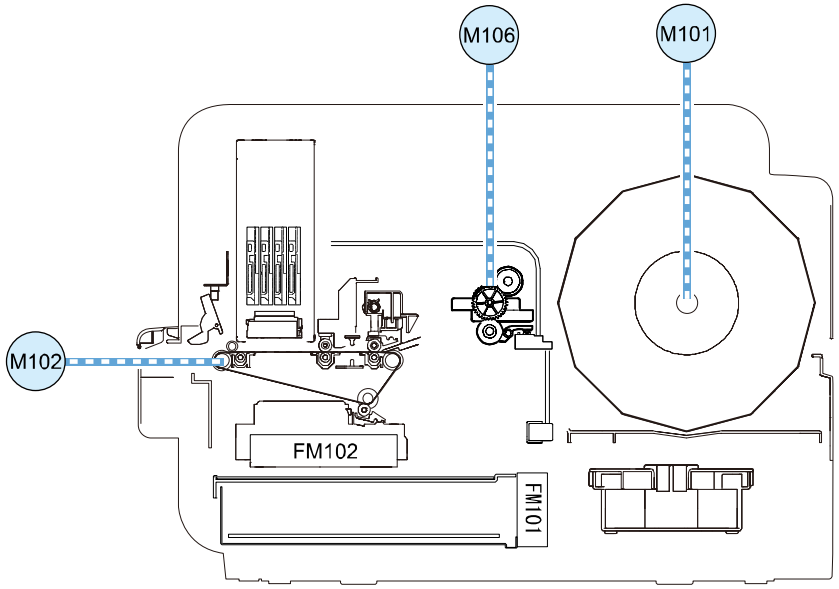

RIGHT VIEW

M103:	Purge Motor	CL101:	Valve Clutch
M104:	Printhead Lift Motor	CL102:	Pump Clutch
M105:	Pump Motor	SL101:	Buffer Solenoid

M101:	Roll Motor
M102:	Transport Motor
M106:	Valve Motor

Basic Sequence

Outline

Initialization processing that must be performed at power-on to allow Printer to perform printing properly is broadly classified into hardware start and initialization sequences.
On the other hand, shutdown processing is performed at power-off to retain Printer condition normally until Printer is used next time.

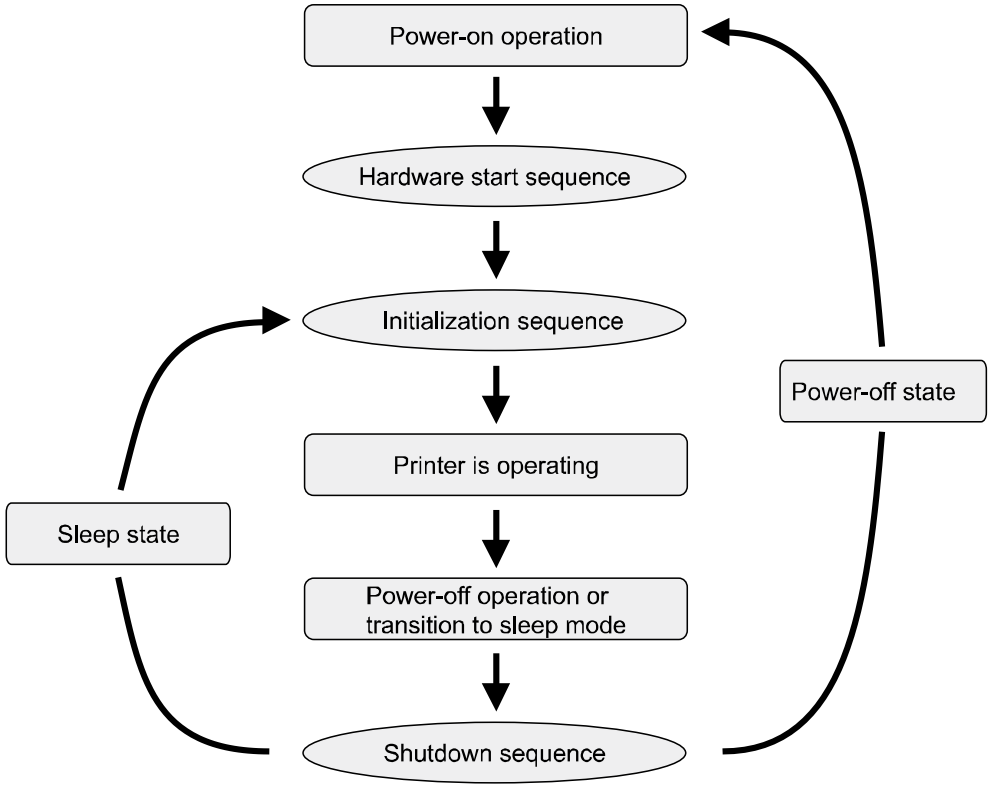

Hardware Start Sequence

This is electrical initialization performed when Printer is turned on.

Initialization Sequence

This is electrical initialization performed when Printer is turned on.
Initialization is performed after completion of the hardware start process following power-on of Printer.
In Update mode, no operation is performed. In Service mode, only cleaning for initialization is not performed.

Operations are described below in detail.

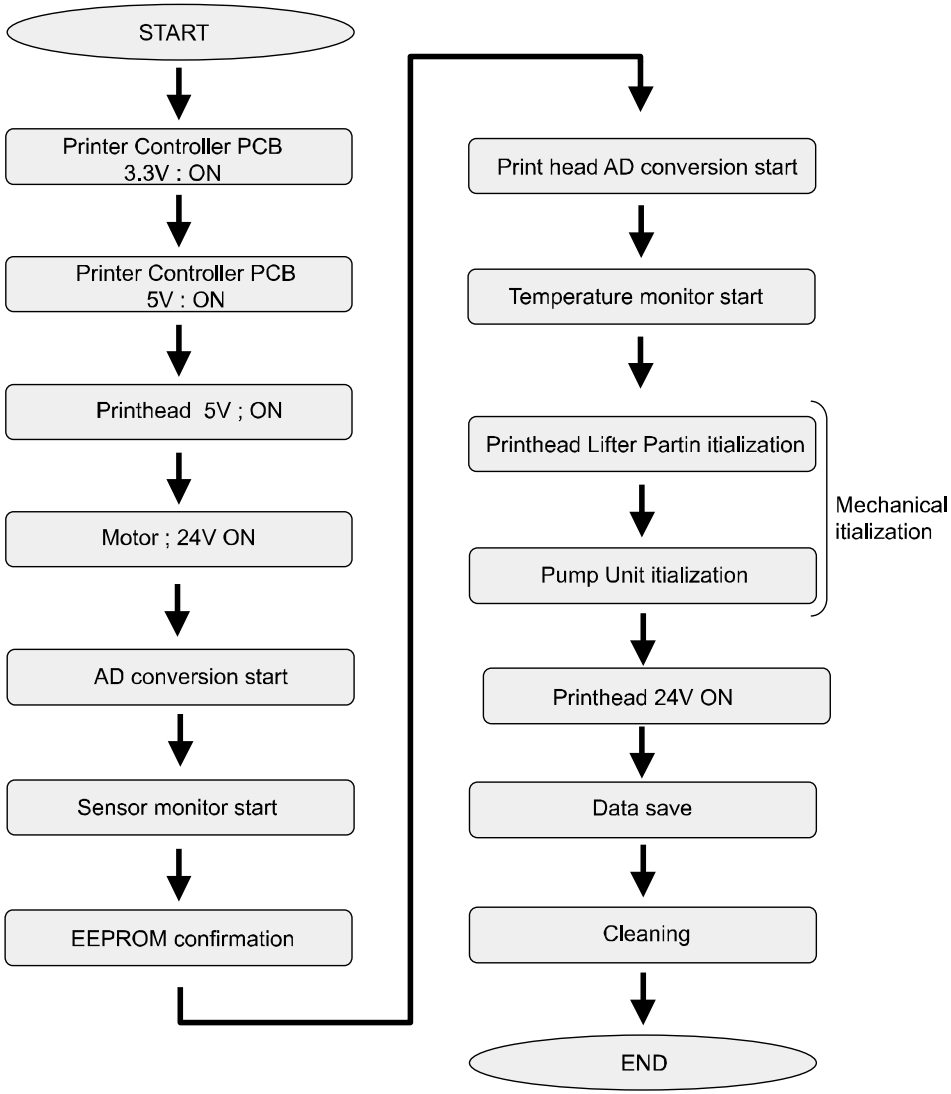

No.	Operations	Details
[1]	Printer Controller PCB 3.3 V ON	Turns on the 3.3 V power supply for driving sensors.
[2]	Printer Controller PCB 5 V ON	Turns on the 5 V power supply for logic circuit, etc.
[3]	Printhead 5 V ON	Turns on the 5 V power supply for driving Printhead PCB.
[4]	Motor-related 24 V ON	Turn on the 24 V power supply for driving various Motors.
[5]	AD conversion start	Starts AD conversion.
[6]	Sensor monitoring start	Starts monitoring of the sensors used to detect open/ closed states of various Covers and presence/absence of ink.
[7]	EEPROM check	Checks the data stored in EEPROMs mounted on Printheads and Ink Tank.
[8]	Printhead AD conversion start	Starts AD conversion of Printhead temperature.
[9]	Temperature monitoring start	Starts monitoring of a Printhead temperature error.
[10]	Printhead Lifter Part initialization	Determines Printhead and Purge Unit positions, and checks a sensor error.
[11]	Printhead 24V ON	Turns on the 24 V power supply for driving Printhead PCB.
[12]	Pump Unit initialization	Determines Pump Unit position and checks a sensor error.
[13]	Data saving	Saves the current Printer condition in the Flash ROM.
[14]	Cleaning	Performs cleaning during initialization. The degree of cleaning varies depending on the time that has elapsed since the previous cleaning, etc. This operation is performed only in user mode.

Shutdown Sequence

The shutdown sequence is performed when Printer is turned off, Printer enters the sleep mode after lapse of a set time, or Service Call Error occurs.
When Service Call Error that disables mechanical operation has occurred, "cleaning" and "mechanical shutdown" operations are skipped and only the shutdown sequence is performed.
Operations are described below in detail.

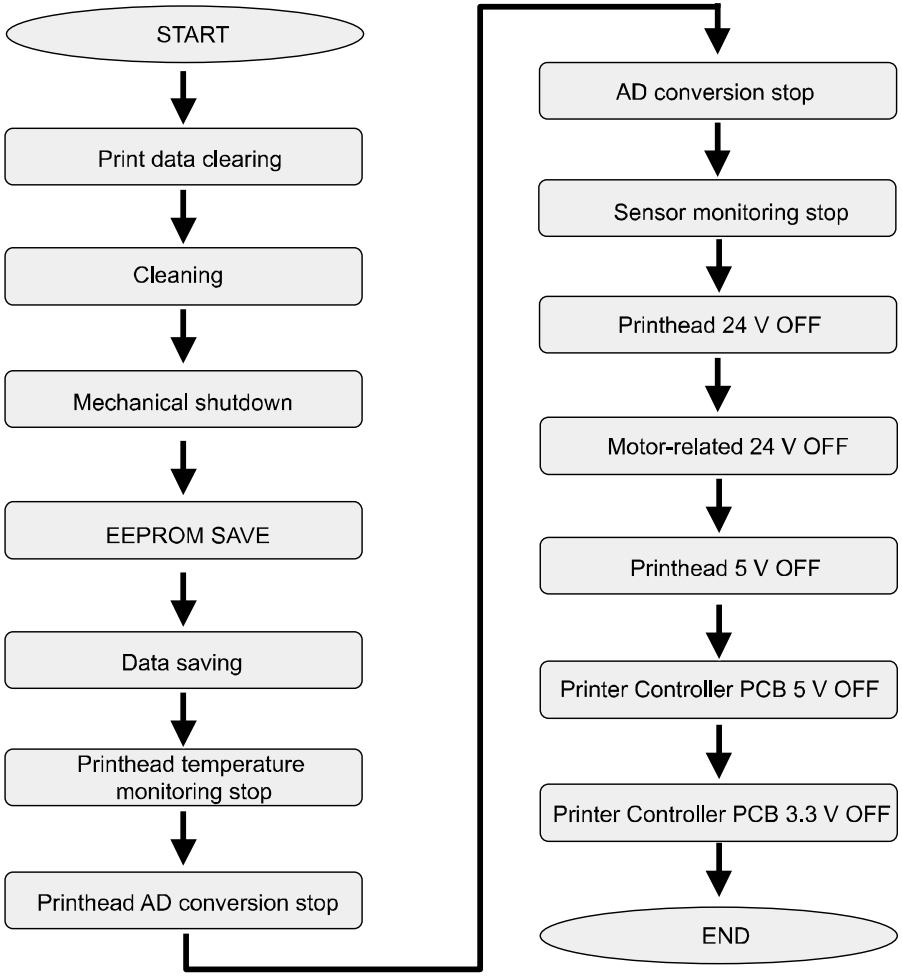

No.	Operations	Details
[1]	Print data clearing	Clears the data stored in the memory.
[2]	Cleaning	Performs shutdown cleaning to keep Printhead in good conditions.
[3]	Mechanical shutdown	Places mechanical units in the state ideal for sleeping.
[4]	EEPROM SAVE	Saves various data in the EEPROMs mounted on Printhead, Ink Tank, and Maintenance Cartridge.
[5]	NVRAM SAVE	Saves various data in Flash ROM.
[6]	Printhead temperature monitoring stop	Stops controlling detection of a Printhead temperature error.
[7]	Printhead AD conversion stop	Stops AD conversion of Printhead temperature.
[8]	AD conversion stop	Stops obtaining AD conversion values of paper width, internal temperature, humidity, Printhead temperature, and TOF Sensor.
[9]	Sensor monitoring stop	Stops monitoring sensors that detect open/closed states of various covers and the remaining amount of ink.
[10]	Printhead 24V OFF	Turns on the 24 V power supply for driving Printhead PCB.
[11]	Motor-related 24V OFF	Turns off the 24 V power supply for driving motors.
[12]	Printhead 5V OFF	Turns off the 5 V power supply for driving Printheads.
[13]	Printer Controller PCB 5V OFF	Turns off the 5 V power for driving TOF Sensor, etc.
[14]	Printer Controller PCB 3.3V OFF	Turns off the 3.3 V power supply for driving sensors.

Power Supply

Overview

DC Power Supply Unit of Printer has 2 type of outputs, DC 5V and DC 24V.
Each PCBs are supplied like the illustration below. Printer has sleep mode. DC 5V supply all the time while power is turned on. DC 24V output is controlled by PWRON signal of Printer Controller PCB. PWRON signal is changed "H" and "L" related to the operation of Power Key on Operation Panel and signal from printer driver of PC.

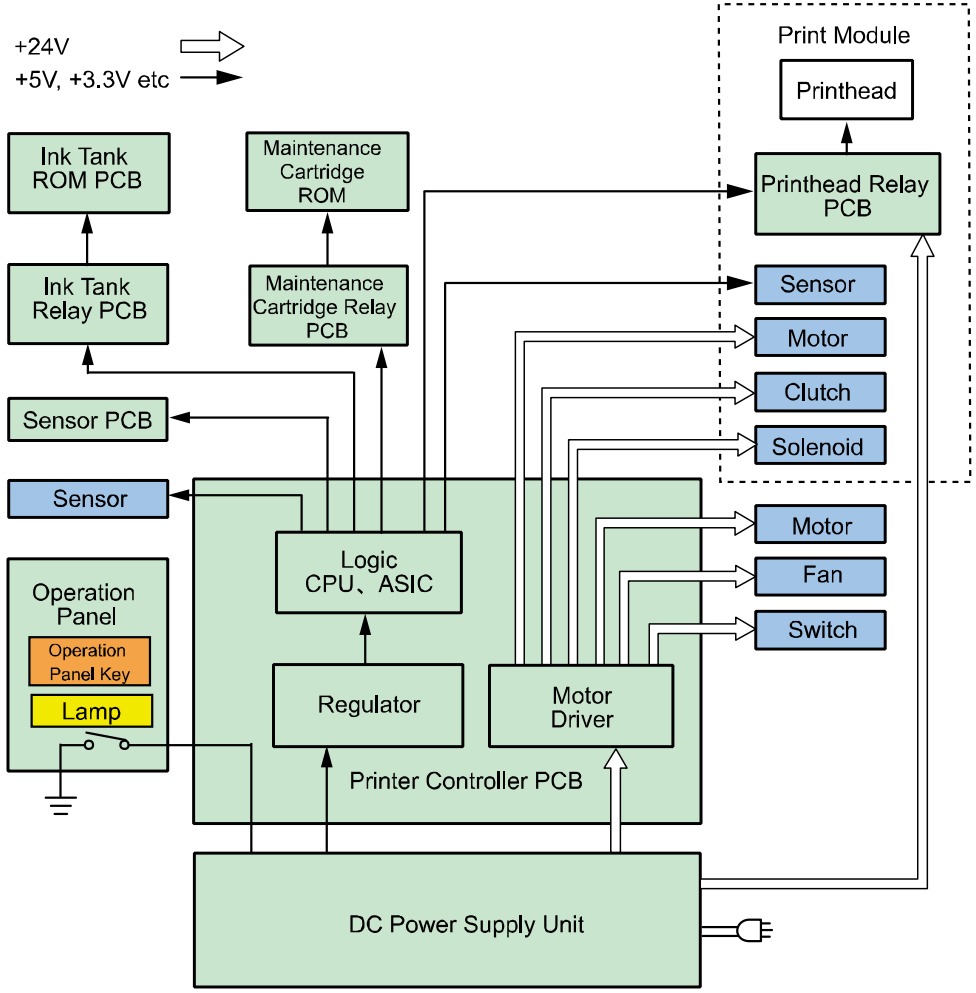

Image Formation System

Main Parts Configuration

Image Formation System discharges ink from Printhead based on the print data to form a print image on paper. It consists mainly of Printheads, Printhead Lifter Part, and Purge Unit in Print Module.
The basic configuration of Image Formation System is shown below.

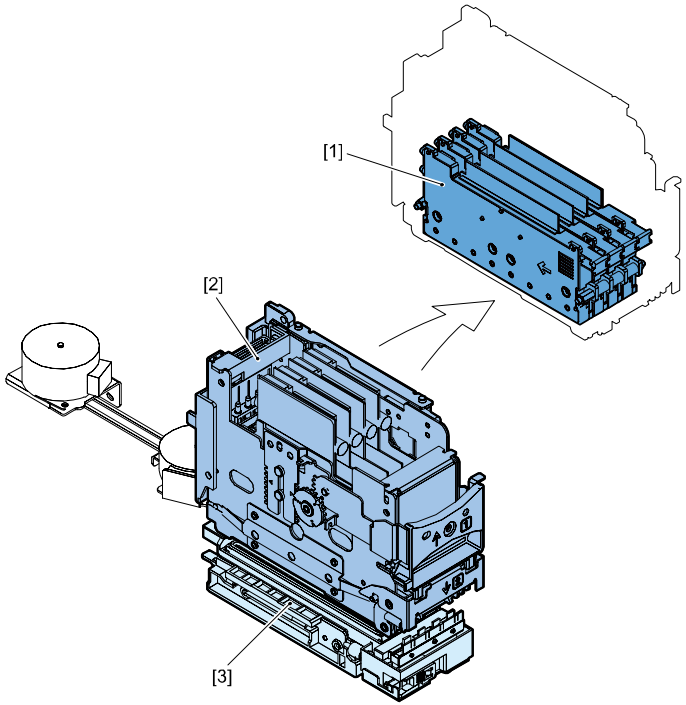

[1] Printhead

[2] Printhead Lifter Part

[3] Purge Unit

Various Types of Control

Image Formation System Operation Positions

There are 4 basic positional relations between Printheads and Purge Unit of Image Formation System that are determined according to the operation state of Printer.

Capping Position

When Printer is not powered or is on standby, Printhead faces are covered with rubber caps of Purge Unit to protect the ink discharge faces of Printheads from drying and dust. Cleaning and ink supply operations are also performed at the capping position along with driving of Pump Unit.

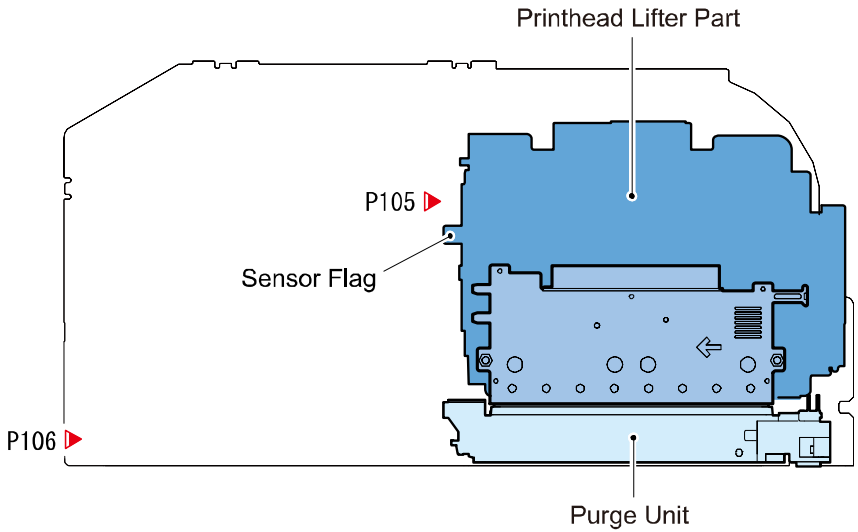

Evacuation Position (Home Position)

Whenever Printhead Lifter Part moves, it moves up to the evaluation position temporarily. Printhead Lifter Part temporarily moves to the position where it is detected by Printhead HP Sensor (P105), and then moves to the predetermined position according to the predetermined number of drive pulses.

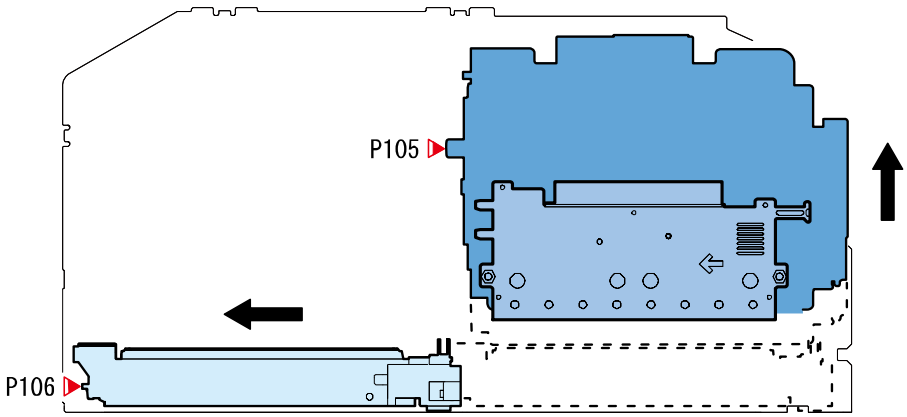

Wiping Position

Printheads move to the wiping position, and Purge Unit slides rightward. Blade of Purge Unit removes excessive ink from the ink discharge faces of Printheads. Each position of Purge Unit is detected by Purge Position Sensor (P106).

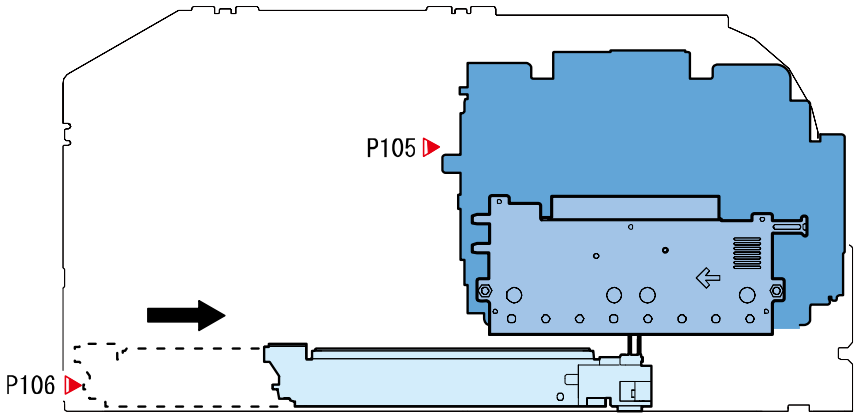

Printing Position

Purge Unit moves to the evacuation position, and the ink discharge faces of Printheads descend to the position which is 1.45 mm lower than the upper surface of Belt of Transport Unit to start printing.

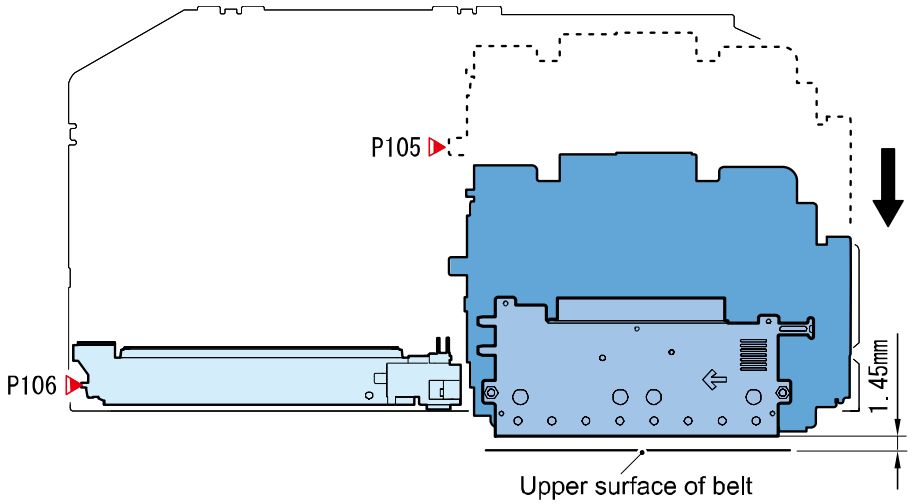

Printheads

Overview

Printheads of Printer have 5,184 Ink Discharge Nozzles which are arranged on Printhead face. 5,030 nozzles are used for actual printing, and the remaining 60 nozzles are used for sideways registration.
Ink supplied from Ink Tank is filtered and supplied to Nozzles. When Printhead drive current flows to Nozzle Heater, ink drops from Nozzles due to the bubbles generated from boiled ink.

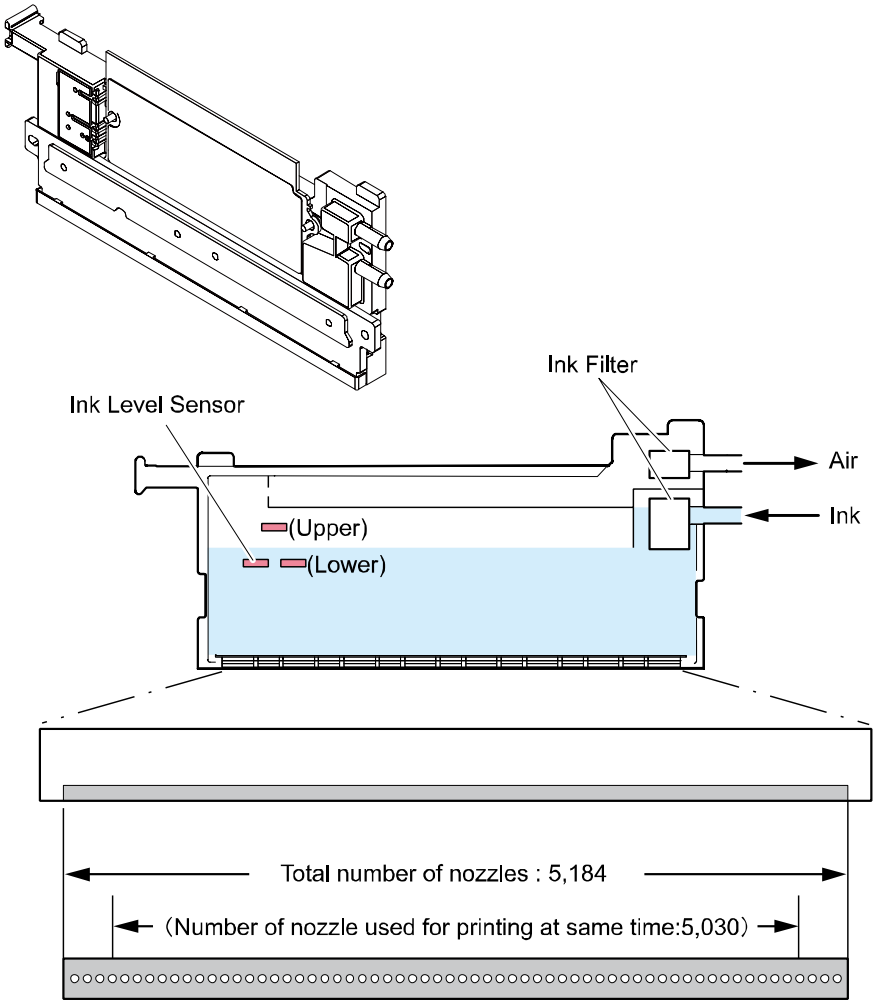

Printhead Unit Structure

Printhead Unit consists of 4 Printheads corresponding to 4 colors: Black, Cyan, Magenta, and Yellow. Printheads are mounted at even intervals by inserting a spacer between adjacent Printheads, and assembled using shafts and nuts.
When handling Printhead Unit, hold its handle shown below. When replacing Printhead, take Printhead Replace Tool from inside of Printer, and place Printhead on it. Never replace Printhead with it placed in any place other than the Printhead Replace Tool. Poor printing can result.

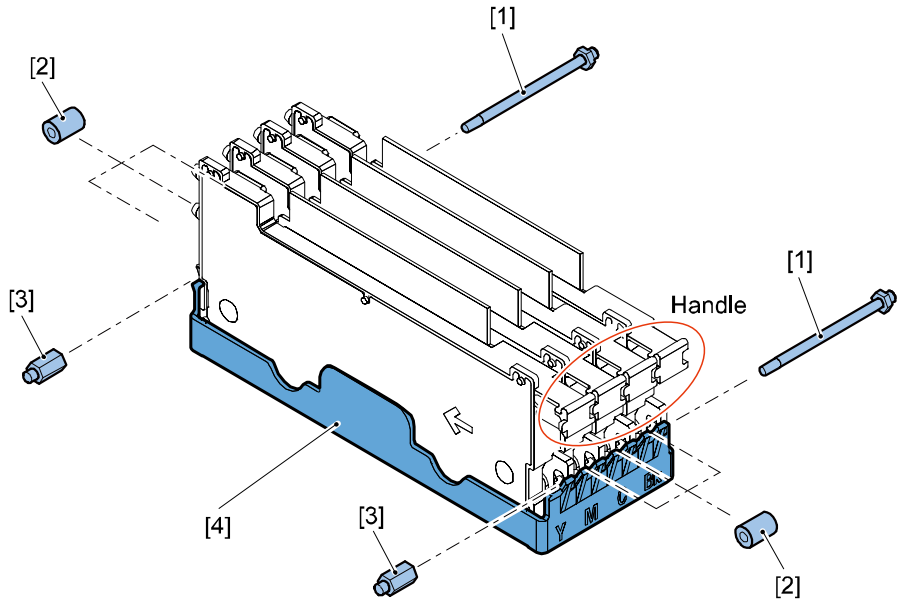

[1] Shaft
[2] Spacer
[3] Nut
[4] Printhead replacement jig

CAUTION:

Semiconductive components are used in the printhead.
As careless handling of the printhead under low humidity may cause electrostatic destruction in it, be sure to wear a grounding wrist strap prior to the handling.

AIS (Auto Image Shift) Function

AIS function shifts whole images by 16 dots (0.32mm) for each set of 10,000 sheets printed to prevent the same nozzle from being in a heavy duty (e.g. ruled lines). AIS function has an effect on ruled line up to 0.32 mm.

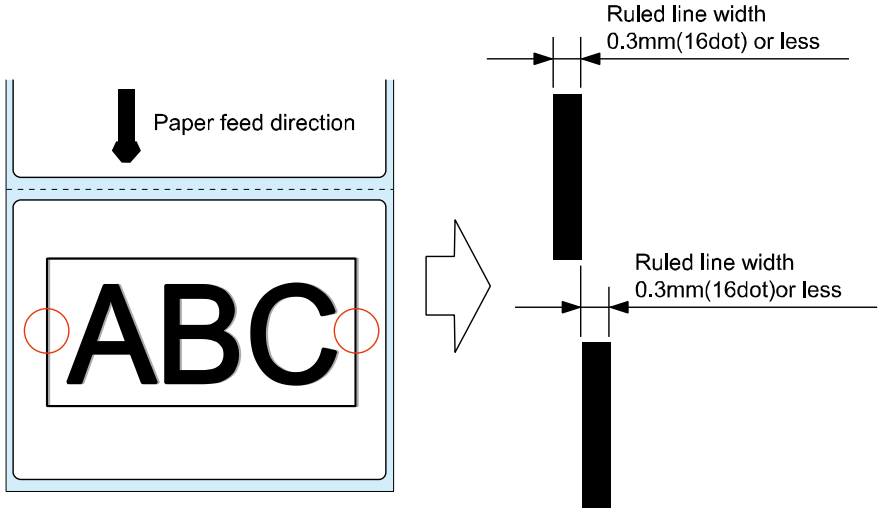

Printhead Lifter Part

Overview

Printhead Lifter Part holds Printheads. It is moved up/down by Printhead Lift Motor (M104) via Rack Gear and Worm Gear. The home position of Printhead Lifter Part is detected by Printhead HP Sensor (P105).

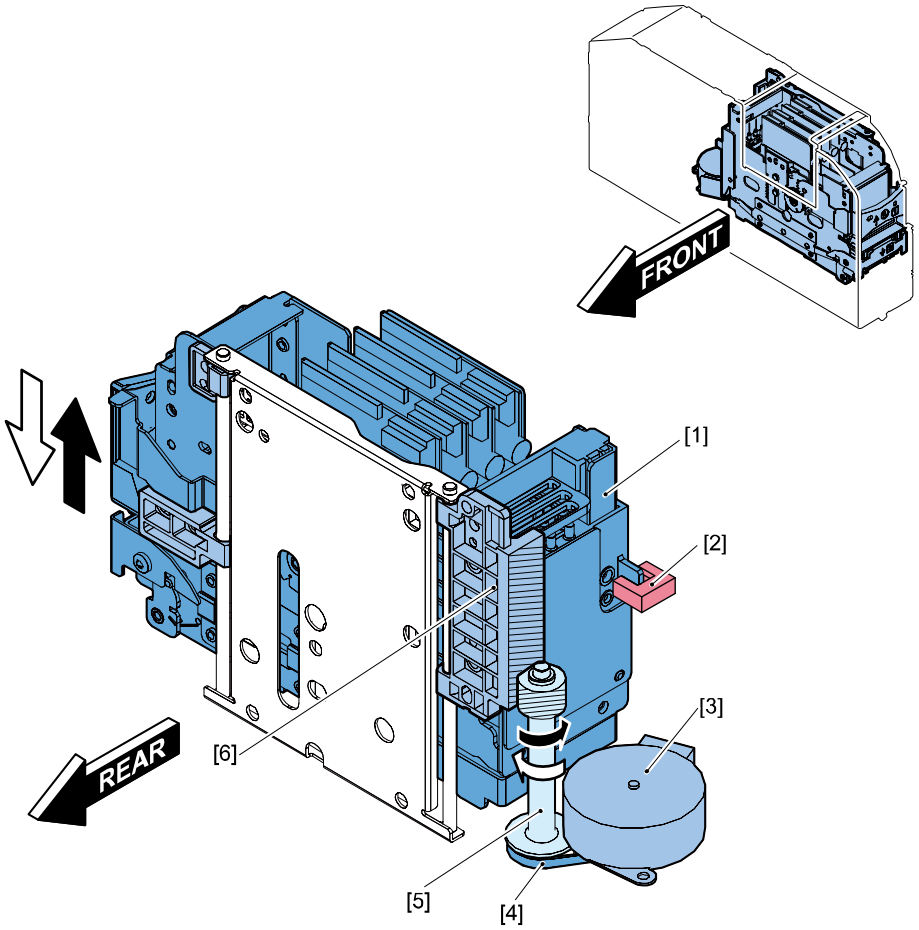

[1] Printhead Lifter Part
[2] Printhead Home Position Sensor
[3] Printhead Lift Motor(M104)
[4] timing belt
[5] worm gear
[6] rack gear

Outline of Operation

Printhead Lifter Part is driven by Printhead Lift Motor (M104). The home position of Printhead Lifter Part is detected by Printhead HP sensor. Movement from the home position to the predetermined position is controlled according to the number of drive pulses of Printhead Lift Motor.

a. Home position (Evacuation position)	Reference position to which Printheads are evacuated when Printhead Lifter Part moves to the predetermined position or when Purge Unit moves
b. Wiping position	Position where wiping operation is performed.
c. Capping position	Position where capping is performed.
d. Printing position	Position where printing is performed.

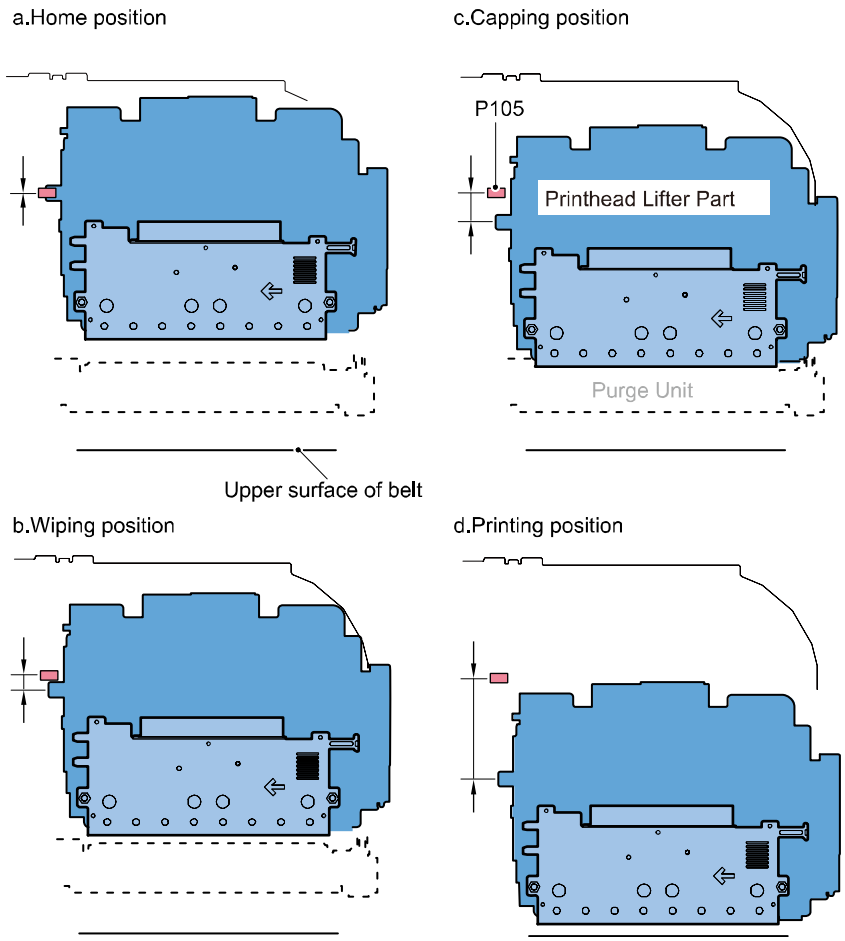

Purge Unit

Overview

Purge Unit performs maintenance for Nozzles of Printheads to maintain print quality. Purge Unit has capping and cleaning functions. Purge Unit protects the Printhead faces from drying and dust, collects maintenance jet ink, drives Pump Unit, and performs cleaning.

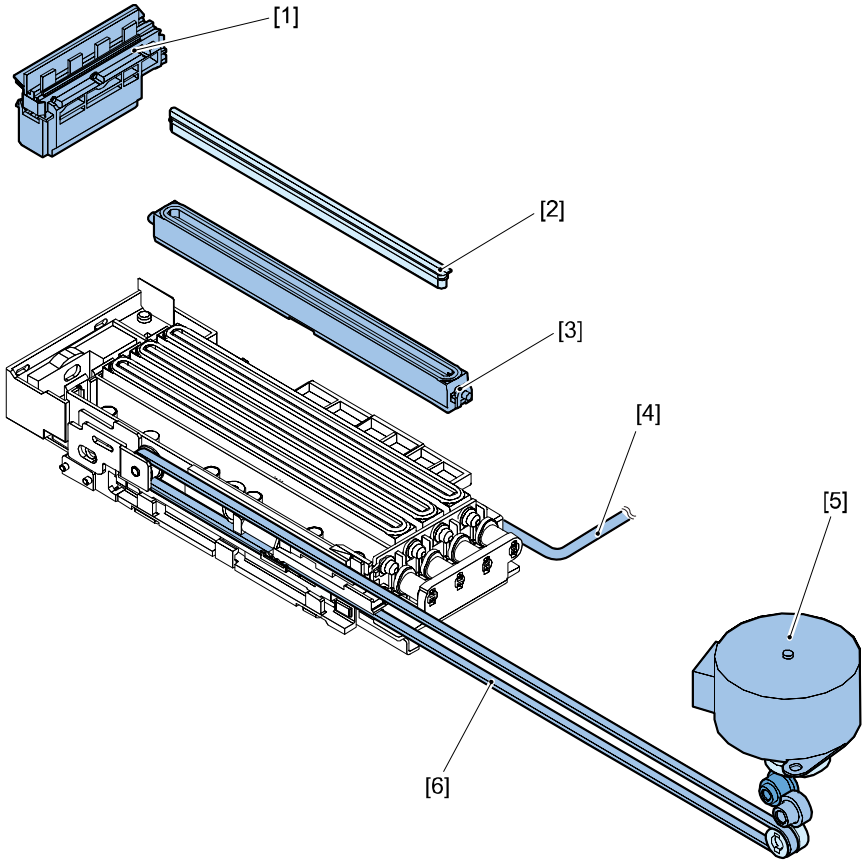

[1]	Blade Unit	[4]	Waste Ink Tube
[2]	Cap ink absorber	[5]	Purge Motor(M103)
[3]	Cap	[6]	Timing Belt

Outline of Operation

Purge Unit is driven by Purge Motor (M103). The home position of Purge Unit is detected by Purge Position Sensor. Movement from the home position to the predetermined position is controlled according to the number of drive pulses of Purge Motor (M103).

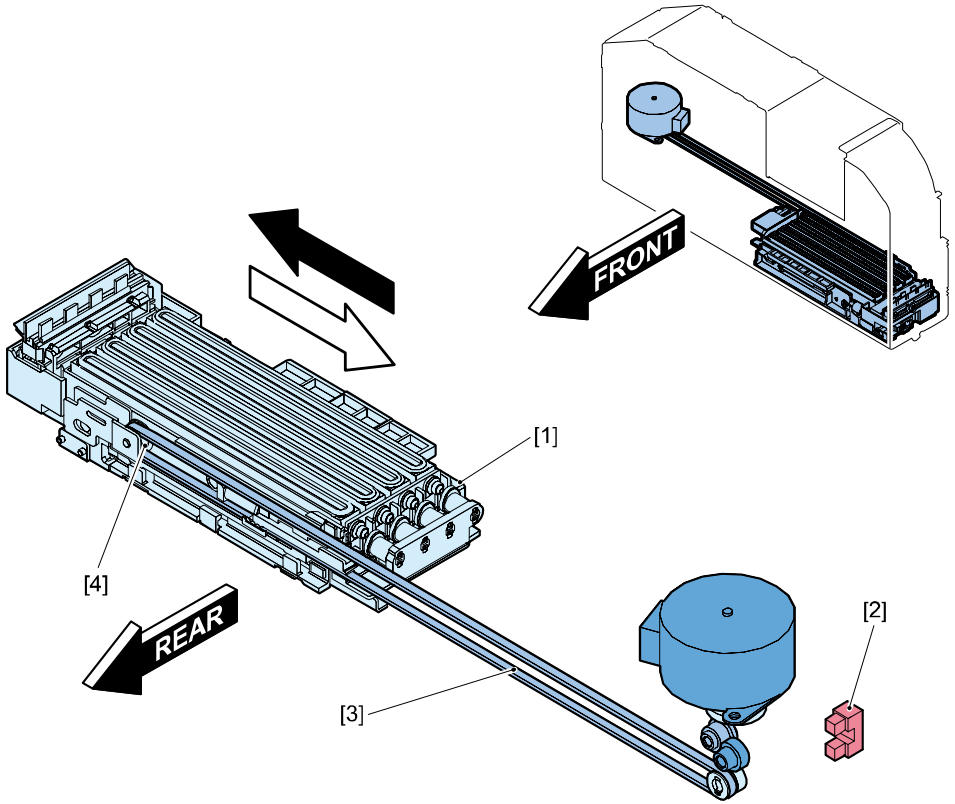

[1]	Purge Unit	Performs maintenance of Nozzles of Printheads.
[2]	Purge Position Sensor (P106)	Detects the home position of Purge Unit.
[3]	Timing Belt	Transmits the drive force of Purge Motor to Purge Unit.
[4]	Pulley	Transmits the drive force of Purge Motor to Purge Unit.

Cleaning Operation

Types of Cleaning Operation

Printer cleans Printheads automatically (Auto-Cleaning) as needed to prevent non-discharges caused by condensed ink, bubbles, dust or the like when main power is turned ON, before, while or after printing is carried out and upon recovery from error state.
Further, required cleaning operations can be selectively executed with Printer Driver, Service Maintenance Mode (by Operation Panel Key) and Service Utility.
Ink drainage and ink loading can also be executed when Printheads are replaced or Printer is relocated.
Cleaning and ink drainage and loading operations fall into 13 kinds as listed below.

No.	Operation	Operation type	Purpose and Details	PD *1	SU *2	MM *3
1	Auto cleaning	Cleaning of initialization	This operation is performed during the initialization sequence performed at power-on.			
2		Cleaning before printing	This operation is performed before printing the received print data.			
3		Cleaning during printing	This operation is performed during printing.			
4		Cleaning after printing	This operation is performed after completion of print processing.			
5		Cleaning at transition to sleep mode	This cleaning is performed during transition to sleep.			
6		Cleaning after error recovery	This cleaning is performed after recovery from the error state.			
7		Printheads over-temperature (low/ high temperature) cleaning	This cleaning is performed to prevent meniscus from becoming unstable due to Printheads over-temperature.			
8	Manual cleaning	Light Cleaning	Cleaning that is carried out first when non- discharges occur.	Yes	Yes	
9		Medium Cleaning	Cleaning somewhat stronger than Light Cleaning when non-discharges persist after Light Cleaning.	Yes	Yes	
10		Strong Cleaning	Cleaning somewhat stronger than Medium Cleaning when non-discharges persist after Medium Cleaning.	Yes	Yes	Yes
11		Initial ink loading	Loads ink when ink flow path is not filled with ink for some reason.		Yes	Yes
12	Ink drainage	Printhead replacement	This operation is ink drainage performed manually when Printheads are replaced.		Yes	Yes
13		Shipping the printer	This operation is ink drainage performed manually when Printer is transported (e.g., to another building).	Yes	Yes	Yes
14		Shipping the Defective Printer	Carry out this operation when ink cannot be drained by selecting [Shipping The Printer] due to a Printer trouble.		Yes	
15		Moving the printer	This operation is ink drainage performed manually when Printer is moved to a near place (e.g., on the same floor).	Yes	Yes	

*1 : Printer Driver
*2 : Service Utility
*3 : Maintenance Mode

Cleaning Duration of Time and Ink Consumption

This table has each cleaning duration of time and ink consumption.(*1)

No.	Category			Time	Consumption (4 colors)
1	Auto cleaning	Cleaning of initialization	Initial ink loading	25.0 min	82.50 ml
			Initial ink loading (light)	7.5 min	34.50 ml
			Timer cleaning	10.0 min	12.00 ml
			Long time leaving cleaning	8.5 min	4.60 ml
			Ink level adjustment	1.5 min	0.00 ml
2		Cleaning before printing		0.1 to 0.5 min	0.02 to 0.74 ml
3		Cleaning during printing		0.5 min	0.40 ml
4		Cleaning after printing	Wipe maintenance jet	0.5 min	0.40 ml
			Nozzle Suction	3.5 min	2.50 ml
5		Cleaning at transition to sleep mode		0.25 min	0.00 ml
6		Cleaning after error recovery	Jam cleaning	2.0 min	0.37 ml
			Initial ink loading (light)	7.5 min	34.50 ml
			Ink Tank replacing cleaning (4 colors)	4.0 min	0.00 ml
			Ink Tank replacing cleaning (1 color) *time/ consumption for a color	1.0 min	0.00 ml
7		Printheads over-temperature (low/ high temperature) cleaning		low temperature: 0.5 min high temperature: 8.5 min	low temperature: 0.40 ml high temperature: 4.60 ml
8	Manual cleaning	Light Cleaning		1.0 min	0.40 ml
9		Medium Cleaning		8.0 min	11.00 ml
10		Strong Cleaning		9.0 min	11.00 ml
11	Ink drainage	Printhead replacement		15.5 min	26.40 ml
12		Shipping the printer		15.5 min	26.40 ml
13		Shipping the Defective Printer		12.0 min	64.00 ml
14		Moving the printer		2.5 min	0.00 ml
15	Ink loading	Printhead replacement		25.0 min	82.50 ml
16		Shipping the printer		25.0 min	82.50 ml

(*1)The cleaning duration of time and ink consumption are indicated for reference. They are subject to change due to design change, etc.

Cleaning Operation Conditions

This table has each cleaning operation conditions.(*1)

Printer state		Cleaning name
At standby	• Specified time has elapsed in ready state (Default: 4 min).	Cleaning at transition to sleep mode
At power ON	• The serial number of Printhead has been changed or preparation for ink drainage has been executed in advance. • At least 30 days have elapsed since the last timer cleaning (this cleaning is not performed in the RTC warning state). • At least 2 hours have elapsed since the last ink discharge. • The sensor for the lower limit of the ink level in Ink Chamber of Printhead has not detected ink. • At least 90 days have elapsed since the last ink discharge. • Printer is started for the first time since it was reset in the factory. • Nozzle-suction-related operation has been performed, or maintenance jet counter for determining whether cap suction has been executed has reached the specified value after completion of each recovery operation.	Cleaning of initialization
At power OFF	• Printer driver's button for transition to sleep mode is pressed. • When Power key is pressed long in ready state, maintenance jet counter for cap suction execution judgment has reached the specified value.	Cleaning at transition to sleep mode
Before printing	• The uncapped state has been held for a total of 90 seconds or longer since the last ink discharge. • Cleaning is always performed before printing. (The maintenance jet count varies depending on the uncapped time and the time elapsed since the previous cleaning.) • The sensor for detecting the lower limit of the ink level in Ink Chamber of Printhead has not detected ink. • Nozzle-suction-related operation has been performed, or maintenance jet counter for cap suction execution judgment has reached the specified value after completion of each recovery operation.	Cleaning before printing

Printer state		Cleaning name
During printing	• Wet non-discharge prevention cleaning execution judgment counter has reached the specified value (Maintenance Jet count = 1,900). • Ink pre-fire on the paper mode is OFF and the time from start to stop of printing has exceeded 300 seconds. • Nozzle-suction-related operation has been performed, or maintenance jet counter for cap suction execution judgment has reached the specified value after completion of each cleaning operation.	Cleaning during printing
	• Printhead temperature has reached the specified value.	Printheads over-temperature (low/ high temperature) cleaning
After printing	• Wet non-discharge prevention cleaning execution judgment counter has reached the specified value (Maintenance jet count = 1,900). • Atmosphere slot suction execution judgment counter has reached the specified value, or cap suction has been executed in advance. • The sensor for detecting the lower limit of the ink level in ink chamber of Printhead has not detected ink. • Nozzle-suction-related operation has been performed, or maintenance jet counter for cap suction execution judgment has reached the specified value after completion of each cleaning operation. • After printing process is complete, Bubble Ink Discharge Prevention Cleaning Execution Judgment Counter reached the specified value.	Cleaning after printing
At error occurrence	• A paper jam error has been recovered. • Ink Label Sensor has not detected the ink level even when Printer has been operated for 180 seconds for ink level adjustment, or the state in which the pressure change amount is +/-2 kPa has been held for 90 seconds. (Only this cleaning is executed at occurrence of an error, not after recovery of the error, (occurrence of the error is not reported)).	Cleaning after error recovery
After error recovery	• Atmosphere slot suction execution judgment counter has reached the specified value, or cap suction has been executed in advance. • The sensor for detecting the lower limit of the ink level in ink chamber of Printhead has not detected ink. • Change of Ink Tank serial number has been detected after recover of the error that occurred during cleaning (including pump driving). • Nozzle-suction-related operation has been performed, or maintenance jet counter for cap suction execution judgment has reached the specified value after completion of each cleaning operation.	Cleaning after error recovery

Printer state		Cleaning name
At Ink Tank replacement	• The number of times the target Ink Tank has been replaced is even.	Cleaning after error recovery
At Printhead replacement	• After execution of "Printhead replacement" using Service Utility or Maintenance Mode.	Printhead replacement
At Printer transportation	• After execution of "Shipping the printer" using Service Utility or Maintenance Mode.	Shipping the printer
	• After execution of "Shipping the defective printer" using Service Utility or Maintenance Mode.	Shipping the defective printer
	• After execution of "Moving the printer" using Service Utility or Maintenance Mode.	Moving the printer
User cleaning	• After execution of "Strong Cleaning " using Service Utility	Strong Cleaning
	• After execution of "Medium Cleaning " using Service Utility	Medium Cleaning
	• After execution of "Light Cleaning " using Service Utility	Light Cleaning

(*1) Operating conditions for each cleaning are subject to change due to design change, etc.

Ink Supply System

Overview

Main Parts Configuration

Ink Supply System supplies ink from Ink Tank to Printheads, suctions ink from Printheads, and collects ink from Purge Unit into Maintenance Cartridge. It consists of Ink Tank Holder Unit, Valve Unit, and Pump Unit in Print Module.
The basic configuration of Ink Supply System is shown below.

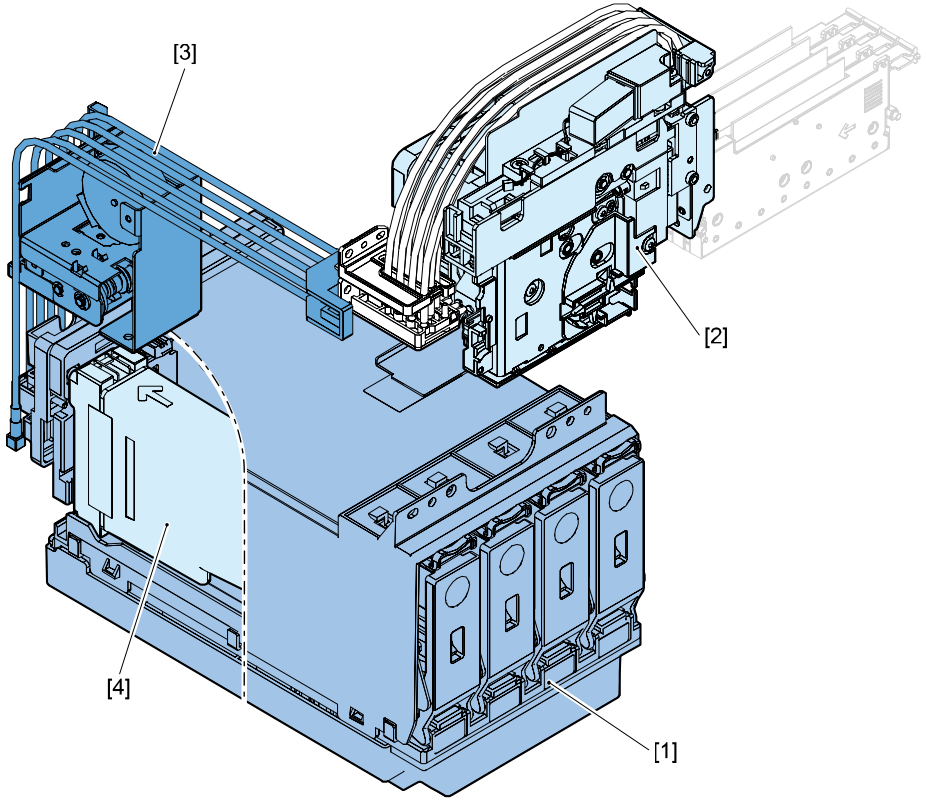

[1] Ink Tank Holder Unit
[2] Pump Unit
[3] Valve Unit
[4] Ink Tank

Control

Outline of Ink Passages

Ink is supplied and collected through opening/closed of 6 Valves and a Suction Pump. The schematic diagram of ink passages is shown below.

- Wipe Valve:
  Valve Unit has Wipe Valves as many as the number of colors, and they are opened and closed at the same timing through rotation of cams.
- Ink Supply Valve:
  Ink Supply Valves corresponding to individual colors are provided in Pump Unit, and they are opened and closed through rotation of cams in the order of Bk, C, M, Y.
- Bubble Removing Valve:
  Bubble Removing Valves corresponding to individual colors are provided in Pump Unit, and they are opened and closed through rotation of cams in the order of Bk, C, M, Y.
- Buffer Valve:
  Buffer Valve is provided at the buffer section (chamber) of Pump Unit, and it is opened and closed through driving of solenoid.
- Pressure Release Valve:
  Pressure Release Valves corresponding to individual colors are provided at the base plate to which Purge Unit is mounted, and they are opened and closed at the same timing through driving of Purge Motor.
- Suction Valve:
  Suction Valve is provided in series with Ink Supply Valves (4) inside Pump Unit; it is opened and closed through rotation of cam.

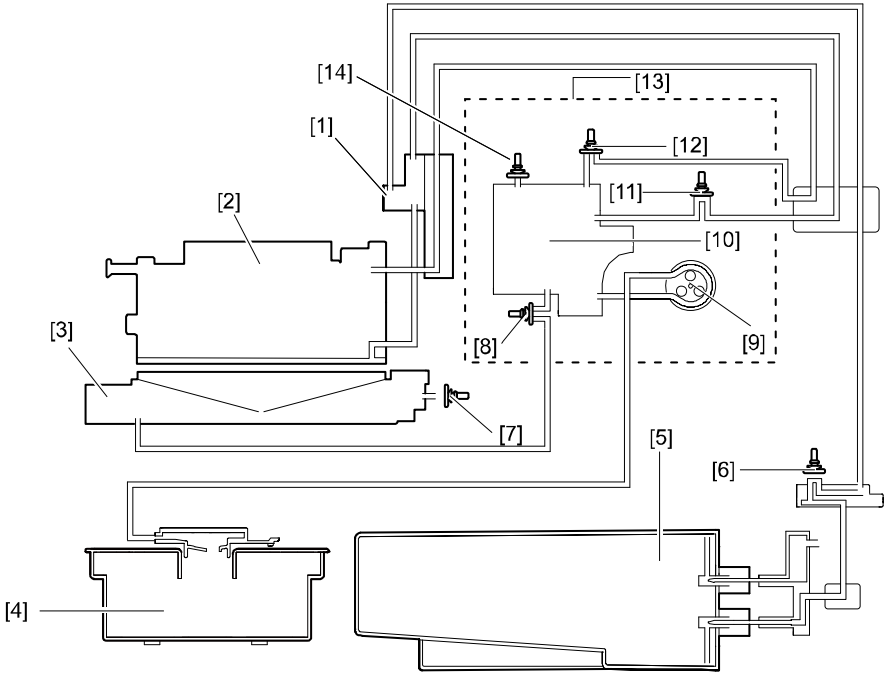

[1]	Sub Tank	[8]	Suction Valve
[2]	Printhead	[9]	Suction Pump
[3]	Purge Unit	[10]	Buffer
[4]	Maintenance Cartridge	[11]	Bubble Removing Valve
[5]	Ink Tank	[12]	Ink Supply Valve
[6]	Wipe Valve	[13]	Pump Unit
[7]	Pressure Release Valve	[14]	Buffer Valve

Operation Modes

Operation modes of Ink Supply System are broadly classified into 3 categories according to the states of components of Printer.

- Initial ink loading
  Ink is supplied from Ink Tanks to Sub Tanks, shipping ink is collected, and ink is supplied from Sub Tanks to Printheads.
- Ink supply during printing
  Ink supplied from Ink Tanks to Printheads to replenish ink used for printing.
- Collection of waste ink within caps
  Ink used for cleaning is collected in Maintenance Cartridge.

The following table shows the relationship between operation modes and open/closed states of Valves and Motor driving state.

Operation mode		Open/Closed state of each Valve						Suction Pump	Between Printheads and Caps
		Bubble removing Valve	Ink Supply Valve	Suction Valve	Pressure Release Valve	Buffer Valve	Wipe Valve		
Initial ink loading	Ink supply from Ink Tanks to Sub Tanks	Open	Closed	Closed	Open	Closed	Open	Driven	Sealed
	Collection of shipping ink (1) Reduction of pressure in Buffer	Closed	Closed	Closed	Open	Closed	Open	Driven	Sealed
	Collection of shipping ink (2) Movement of shipping ink to Buffer	Closed	Closed	Open	Closed	Closed	Open	Driven	Sealed
	Collection of shipping ink (3) Collection of shipping ink in Maintenance Cartridge	Closed	Closed	Open	Open	Closed	Open	Driven	Sealed
	Ink supply from Sub Tanks to Printheads	Closed	Open	Closed	Open	Closed	Open	Driven	Sealed
Ink supply during printing		Closed	Closed	Closed	Open	Closed	Open	Stopped	Separate

Operation mode		Open/Closed state of each Valve						Suction Pump	Between Printheads and Caps
		Bubble removing Valve	Ink Supply Valve	Suction Valve	Pressure Release Valve	Buffer Valve	Wipe Valve		
Collection of waste ink within caps	Reduction of pressure in buffer	Closed	Closed	Closed	Open	Closed	Open	Driven	Sealed
	Collection of waste ink in buffer	Closed	Closed	Open	Open	Closed	Open	Driven	Separate
	Collection of waste ink in Maintenance Cartridge	Closed	Closed	Open	Open	Closed	Open	Driven	Sealed

Ink Loading: Ink Supply from Ink Tanks to Sub Tanks

In order to supply ink from Ink Tank to Sub Tank, Bubble Removing Valve is opened first.
Suction Pump generates negative pressure in the ink passage between the buffer section and Sub Tank and the ink passage between Sub Tank and Ink Tank. Thus feeding ink to Sub Tank. When the predetermined amount of ink is poured in Sub Tank, Bubble Removing Valve is closed. Air flows into Ink Tank through Hollow Needle (atmosphere side), thus maintaining the pressure in Ink Tank constant.
This operation is performed for individual colors in order Bk, C, M, Y.
Open/closed states of valves, the operation state of Suction Pump, and the capping state of Printhead are shown below.

[1]	[2]	[3]	[4]	[5]	[6]	[7]	-
Bubble Removing Valve	Ink Supply Valve	Suction Valve	Air Release Valve	Buffer Valve	Wipe Valve	Suction Pump	Between Printhed and Cap
Open	Closed	Closed	Open	Closed	Open	Driven	Sealed

A schematic diagram of ink passages is shown below.

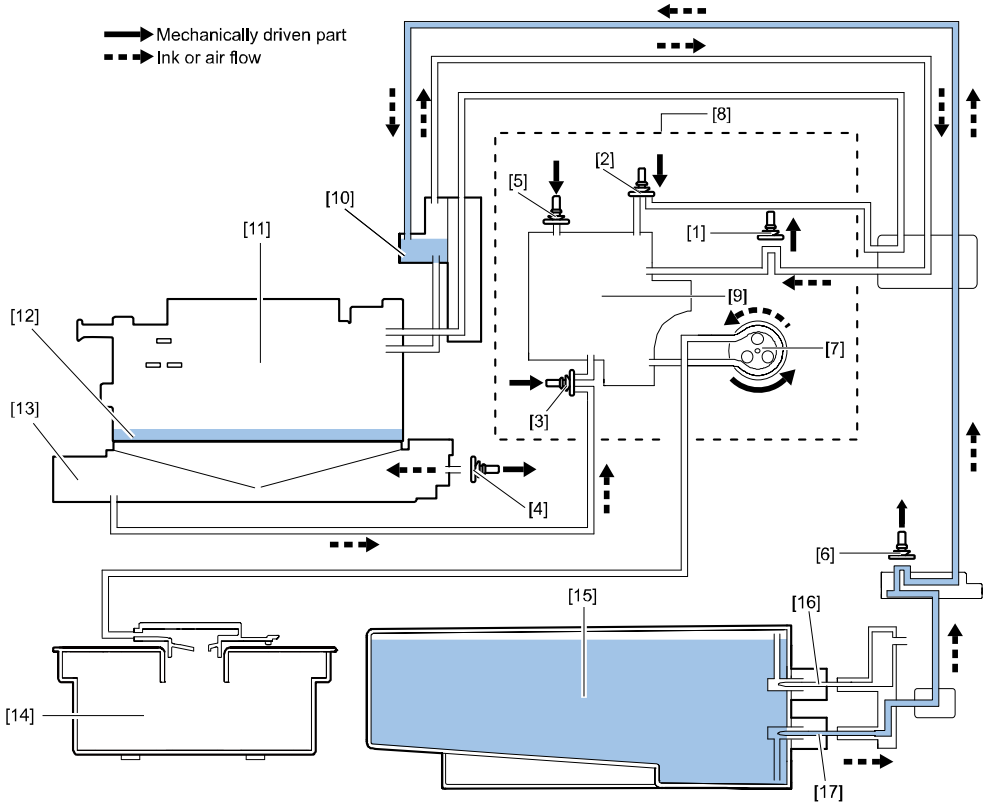

[8]	Pump Unit	[12]	shipping ink	[15]	Ink Tank
[9]	Buffer	[13]	Purge Unit (capping position)	[16]	Hollow needle (Atmosphere side)
[10]	Sub Tank	[14]	Maintenance Cartridge	[17]	Hollow needle(Ink side)
[11]	Printhead				

- **Ink loading: Collection of shipping ink (1)/Reduction of Pressure in Buffer**

All valves other than Wipe Valve are closed with Printhead capped, and Suction Pump is driven to reduce the pressure in Buffer.

Open/closed states of valves, the operation state of Suction Pump, and the capping state of Printhead are shown below.

[1]	[2]	[3]	[4]	[5]	[6]	[7]	-
Bubble Removing Valve	Ink Supply Valve	Suction Valve	Air Release Valve	Buffer Valve	Wipe Valve	Suction Pump	Between Printhed and Cap
Open	Closed	Closed	Open	Closed	Open	Driven	Sealed

A schematic diagram of ink passages is shown below.

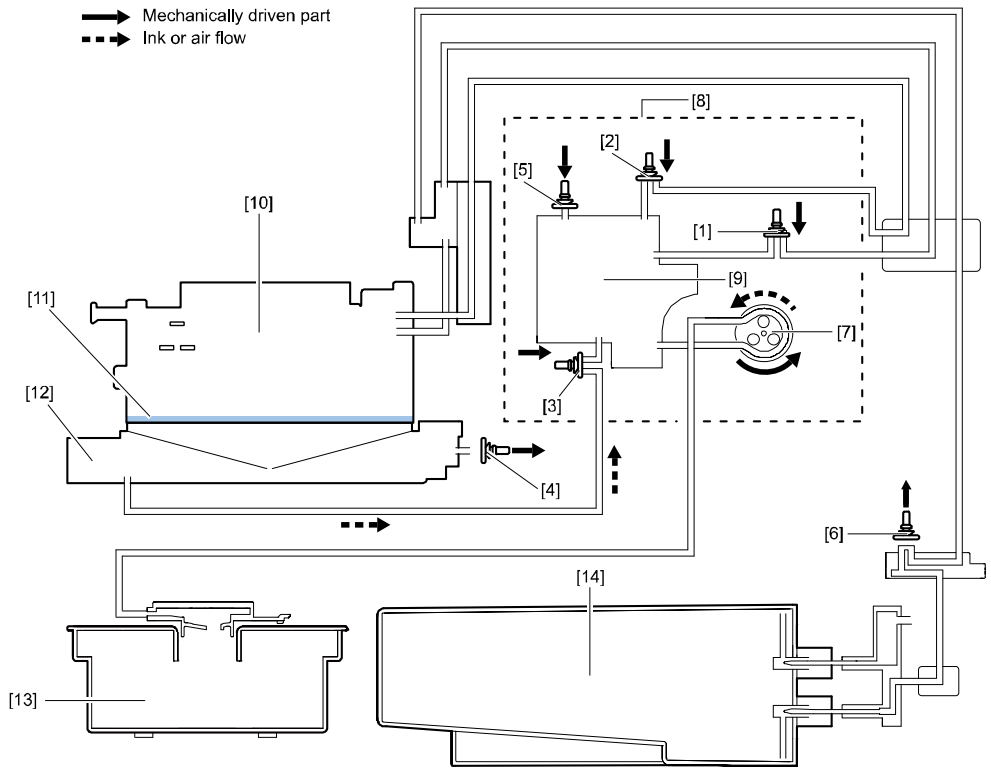

[8]	Pump Unit	[12]	Purge Unit (capping position)
[9]	Buffer	[13]	Maintenance Cartridge
[10]	Printhead	[14]	Ink Tank
[11]	shipping ink		

Ink loading: Collection of shipping ink (2)/Movement of Shipping Ink to Buffer

Pressure Release Valve is closed, tight seal is created between Printhead and Cap, Suction Valve is released, and the negative pressure in Buffer is released to allow shipping ink to flow from Printhead Nozzles to Buffer via Cap.

Open/closed states of valves, the operation state of Suction Pump, and the capping state of Printhead are shown below.

[1]	[2]	[3]	[4]	[5]	[6]	[7]	-
Bubble Removing Valve	Ink Supply Valve	Suction Valve	Air Release Valve	Buffer Valve	Wipe Valve	Suction Pump	Between Printhed and Cap
Closed	Closed	Open	Closed	Closed	Open	Driven	Sealed

A schematic diagram of ink passages is shown below.

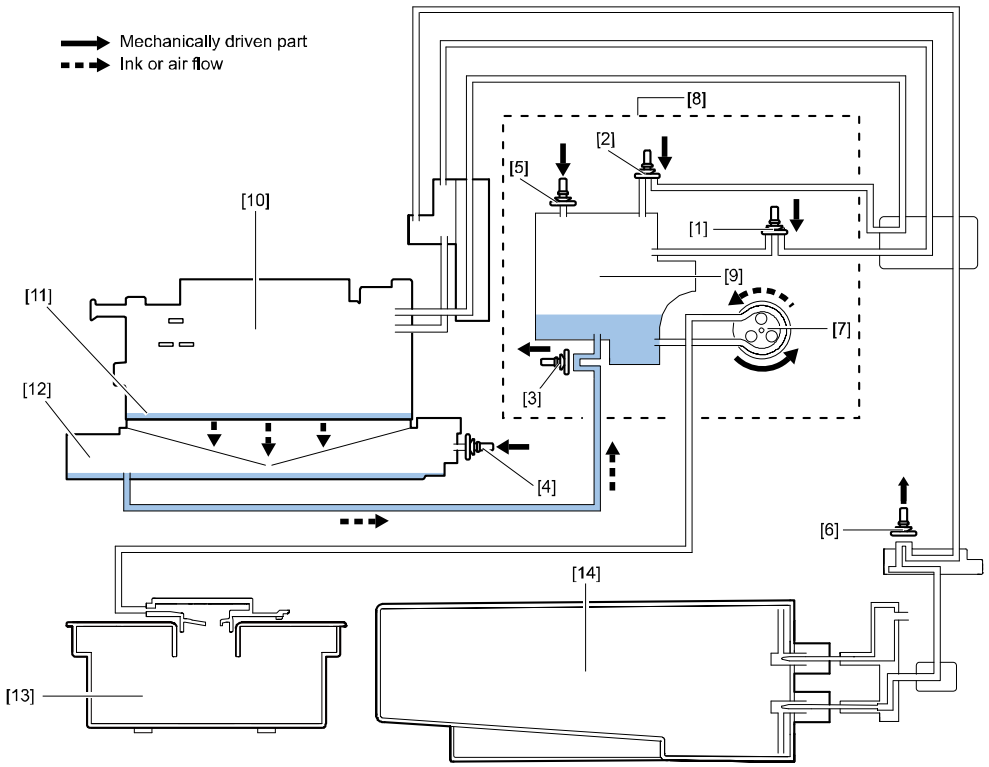

[8]	Pump Unit	[12]	Purge Unit (capping position)
[9]	Buffer	[13]	Maintenance Cartridge
[10]	Printhead	[14]	Ink Tank
[11]	shipping ink		

- **Ink loading: Collection of shipping ink (3)/Collection of Shipping Ink in Maintenance Cartridge**

  With ink present in Buffer, Suction Pump is driven to collect shipping ink in Maintenance Cartridge.

  Open/closed states of valves, the operation state of Suction Pump, and the capping state of Printhead are shown below.

[1]	[2]	[3]	[4]	[5]	[6]	[7]	-
Bubble Removing Valve	Ink Supply Valve	Suction Valve	Air Release Valve	Buffer Valve	Wipe Valve	Suction Pump	Between Printhed and Cap
Closed	Closed	Open	Open	Closed	Open	Driven	Sealed

A schematic diagram of ink passages is shown below.

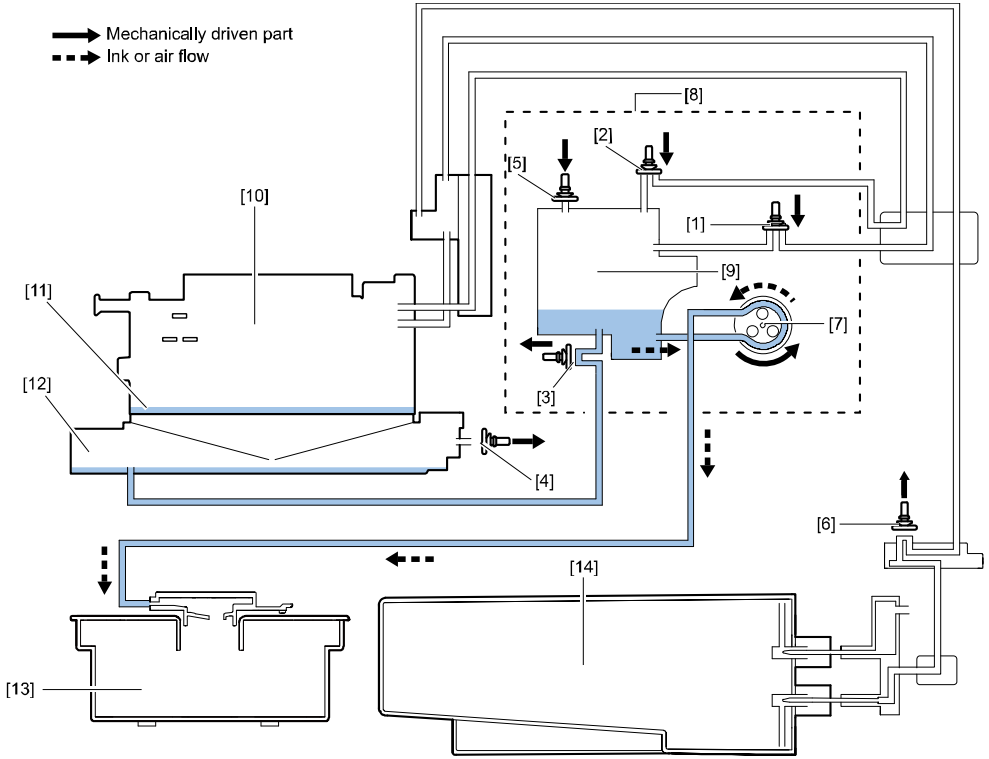

[8]	Pump Unit	[12]	Purge Unit (capping position)
[9]	Buffer	[13]	Maintenance Cartridge
[10]	Printhead	[14]	Ink Tank
[11]	shipping ink		

Ink Loading: Ink Supply from Sub Tanks to Printheads

Ink Supply Valve is opened and Suction Pump is driven to supply ink from Ink Tank to Printhead through Sub Tank and lower part of Printhead Joint. When Ink Level Sensor mounted inside Printhead Joint detects ink, Suction Pump stops and Ink Supply Valve closes. This operation is performed for Ink Tanks for respective colors.
Open/closed states of valves, the operation state of Suction Pump, and the capping state of Printhead are shown below.

[1]	[2]	[3]	[4]	[5]	[6]	[7]	-
Bubble Removing Valve	Ink Supply Valve	Suction Valve	Air Release Valve	Buffer Valve	Wipe Valve	Suction Pump	Between Printhed and Cap
Closed	open	Closed	Open	Closed	Open	Driven	Sealed

A schematic diagram of ink passages is shown below.

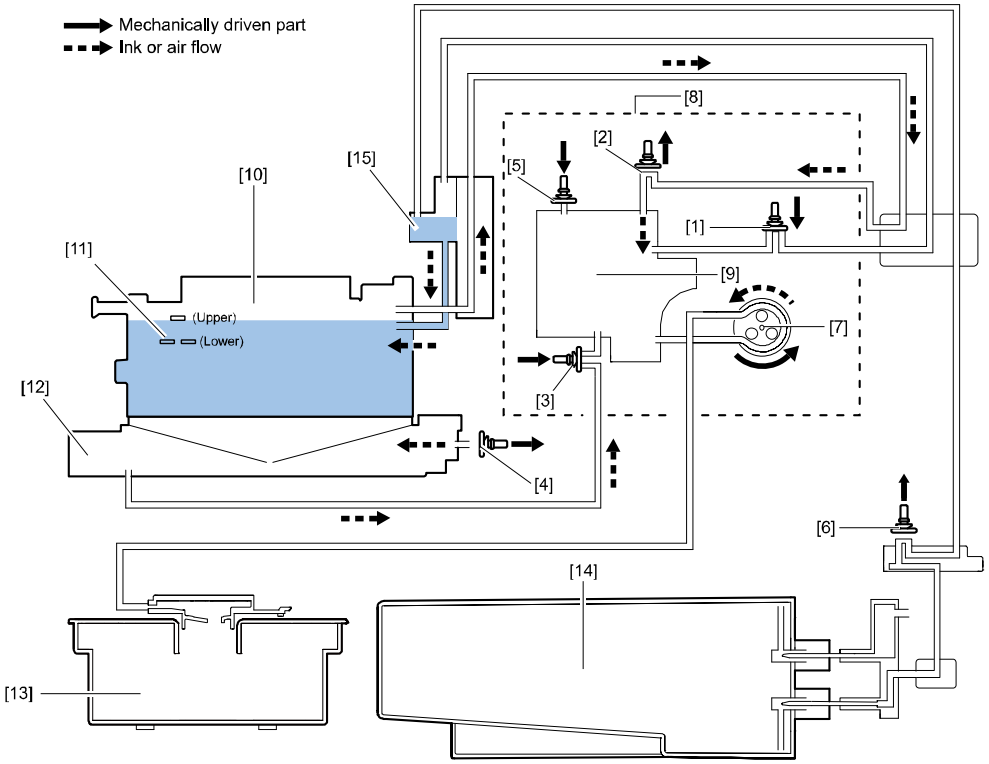

[8]	Pump Unit	[12]	Purge Unit (capping position)
[9]	Buffer	[13]	Maintenance Cartridge
[10]	Printhead	[14]	Ink Tank
[11]	Ink Level Sensor	[15]	Sub Tank

Ink Supply During Printing

During printing, negative pressure is applied to Nozzles due to discharge of ink, thus supplying ink from Ink Tanks to Printheads constantly.
Open/closed states of valves, the operation state of Suction Pump, and the capping state of Printhead are shown below.

[1]	[2]	[3]	[4]	[5]	[6]	[7]	-
Bubble Removing Valve	Ink Supply Valve	Suction Valve	Air Release Valve	Buffer Valve	Wipe Valve	Suction Pump	Between Printhed and Cap
Closed	Closed	Closed	Open	Closed	Open	Stop	Disengage

A schematic diagram of ink passages is shown below.

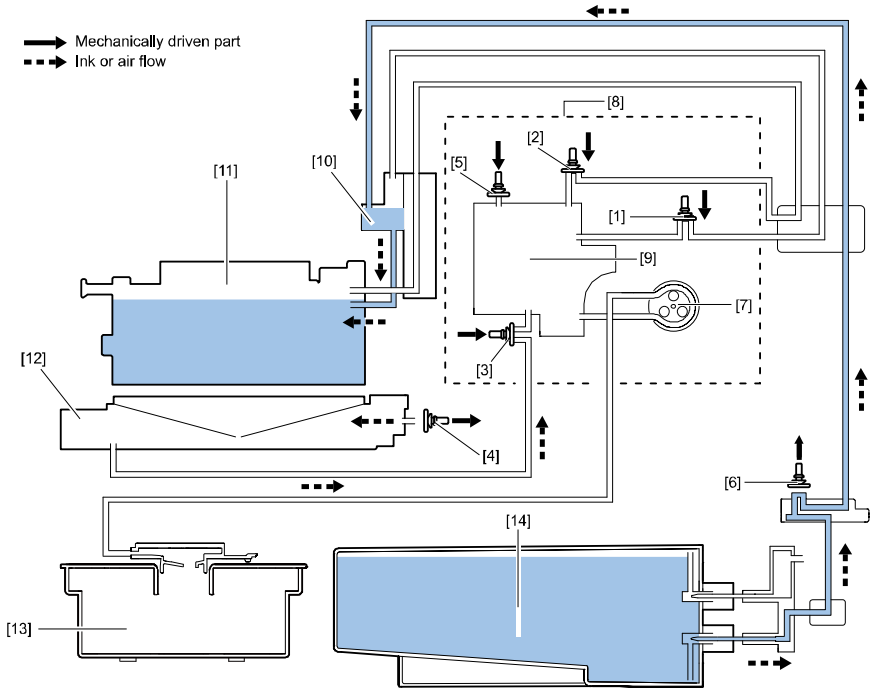

[8]	Pump Unit	[12]	Purge Unit (Movement to evacuation position)
[9]	Buffer	[13]	Maintenance Cartridge
[10]	Sub Tank	[14]	Ink Tank
[11]	Printhead		

Collection of Waste Ink within Cap: Reduction of Pressure in Buffer

All valves other than Pressure Release Valve and Wipe Valve are closed with Printhead capped, and Suction Pump is driven to reduce pressure in Buffer.
Open/closed states of valves, the operation state of Suction Pump, and the capping state of Printhead are shown below.

[1]	[2]	[3]	[4]	[5]	[6]	[7]	-
Bubble Removing Valve	Ink Supply Valve	Suction Valve	Air Release Valve	Buffer Valve	Wipe Valve	Suction Pump	Between Printhed and Cap
Closed	Closed	Closed	Open	Closed	Open	Driven	Sealed

A schematic diagram of ink passages is shown below.

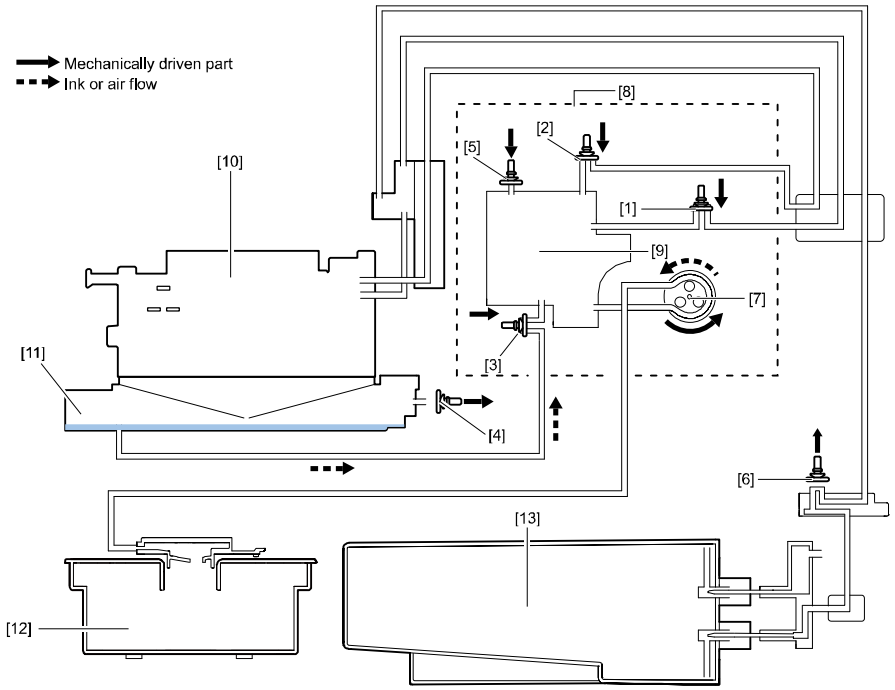

[8]	Pump Unit	[11]	Purge Unit (capping position)
[9]	Buffer	[12]	Maintenance Cartridge
[10]	Printhead	[13]	Ink Tank

Collection of Waste Ink within Cap: Movement of Waste Ink to Buffer

Printheads are lifted to separate it from Caps such that Caps are open to the atmosphere. When the negative pressure in Buffer is released with Pressure Release Valve closed and Suction Valve open, waste ink flows from Caps to Buffer.
Open/closed states of valves, the operation state of Suction Pump, and the capping state of Printhead are shown below.

[1]	[2]	[3]	[4]	[5]	[6]	[7]	-
Bubble Removing Valve	Ink Supply Valve	Suction Valve	Air Release Valve	Buffer Valve	Wipe Valve	Suction Pump	Between Printhed and Cap
Closed	Closed	Open	Open	Closed	Open	Driven	Disengage

A schematic diagram of ink passages is shown below.

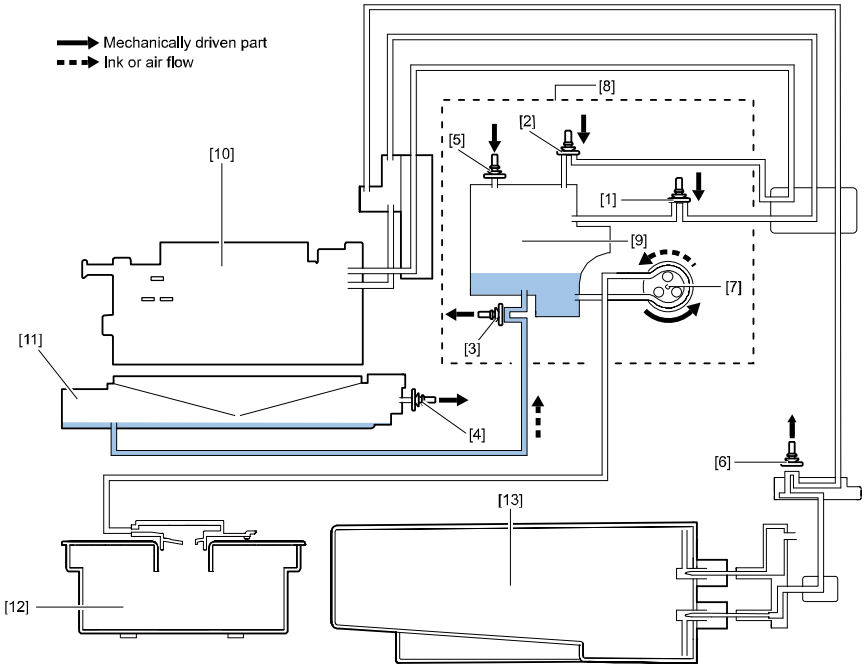

[8]	Pump Unit	[11]	Purge Unit (Cap disengage)
[9]	Buffer	[12]	Maintenance Cartridge
[10]	Printhead	[13]	Ink Tank

Collection of Waste Ink within Cap: Collection of Waste Ink in Maintenance Cartridge

With ink present in Buffer, Suction Pump is driven to collect waste ink in Maintenance Cartridge.
Open/closed states of valves, the operation state of Suction Pump, and the capping state of Printhead are shown below.

[1]	[2]	[3]	[4]	[5]	[6]	[7]	-
Bubble Removing Valve	Ink Supply Valve	Suction Valve	Air Release Valve	Buffer Valve	Wipe Valve	Suction Pump	Between Printhed and Cap
Closed	Closed	Open	Open	Closed	Open	Driven	Sealed

A schematic diagram of ink passages is shown below.

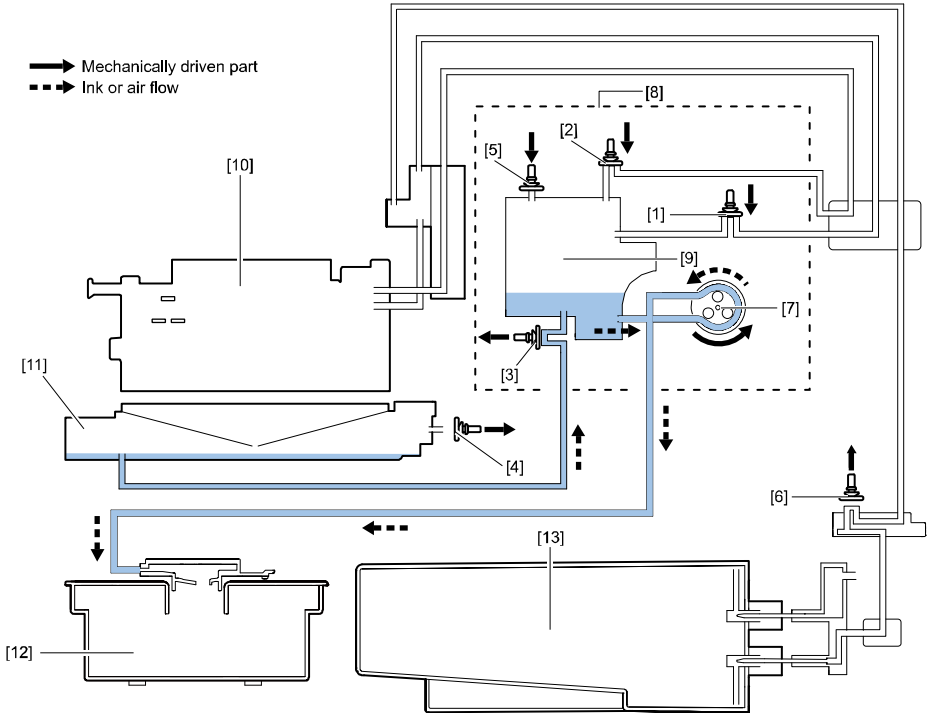

[8]	Pump Unit	[11]	Purge Unit (Cap disengage)
[9]	Buffer	[12]	Maintenance Cartridge
[10]	Printhead	[13]	Ink Tank

Ink Tank Holder Unit

Overview

[1] Ink Tank Relay PCB

This PCB is used to relay signals of Ink Tank ROM PCB to Printer Controller PCB.

[2] Hollow Needle (Ink side)

When Ink Tank is loaded in Printer, Hollow Needle (ink side) is inserted in the rubber plug (ink side) of Ink Tank, thus connecting Ink Tank and Ink Tank Holder Unit.

[3] Hollow Needle (Atmosphere side)

When Ink Tank is loaded in Printer, Hollow Needle (atmosphere side) is inserted in the rubber plug (atmosphere side) of Ink Tank and the internal pressure in Ink Tank is released, thus maintaining the pressure in Ink Tank.

[4] Remaining Ink Sensor

Remaining Ink Sensor is a prism sensor used to detect whether ink remains in Ink Tank.

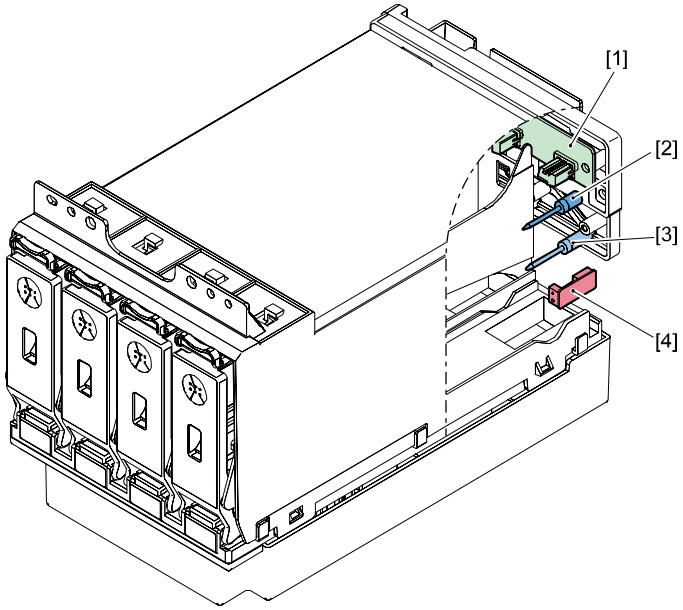

[1]	Ink Tank Relay PCB	[3]	Hollow Needle (Ink side)
[2]	Hollow Needle (Atmosphere side)	[4]	Remaining Ink Sensor

Ink Presence/Absence Detection

When ink is present in Ink Tank, incident light is not reflected and consequently Remaining Ink Sensor (receiver side) does not detect reflected light. When ink is absent, incident light is fully reflected and consequently Remaining Ink Sensor (receiver side) detects the reflected light, resulting in judgment that ink is absent.

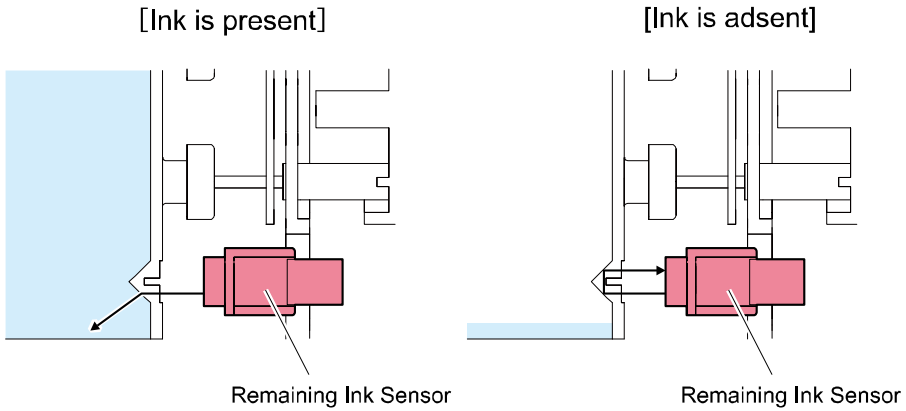

Pump Unit

Overview

Pump Unit is used to perform cleaning and ink supply along with Purge Unit. Pump Unit is driven by Pump Motor (M105).Suction Pump in Pump Unit is driven by Pump Motor. Suction Pump decreases the pressure in sub tank, collects waste ink. Ink Supply Valve, Bubble Removing Valve, and Suction Valve are opened/closed by Pump Cams rotated by Pump Motor driven via Valve Clutches 1 and 2. The phase of Pump Cam is detected by Pump Valve Sensor and is controlled according to the number of Pump Motor drive pulses. These operations are controlled by Printer Controller PCB. On the Supply Valve and Suction Valve side, 5 valves including 4 Supply Valves for 4 colors (Black, Cyan, Magenta, and Yellow) and a Suction Valve are provided. On Bubble Removing Valve side, 4 Bubble Removing Valves for 4 colors (Black, Cyan, Magenta, and Yellow) are provided.
This page is only for reference. Pump Unit cannot be replaced.

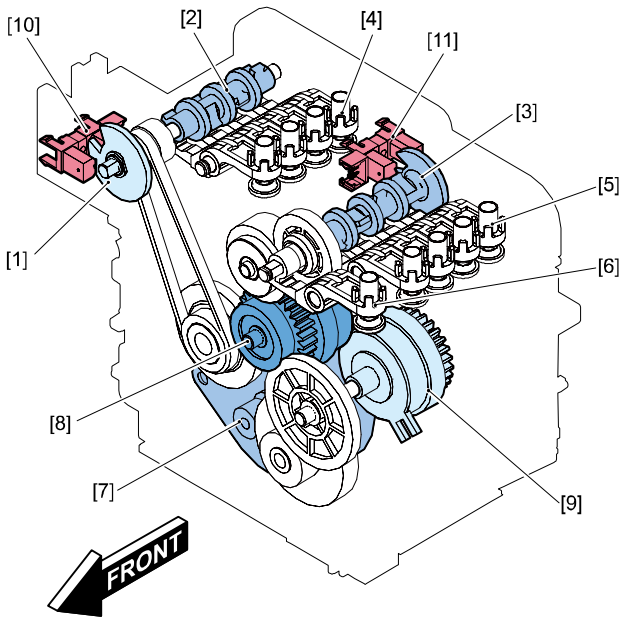

[1]	Sensor Flag	[7]	Pump Motor
[2]	Pump cam 1	[8]	Valve Clutch 1
[3]	Pump cam 2	[9]	Valve Clutch 2
[4]	Bubble Removing Valve	[10]	Pump Valve Sensor 1
[5]	Ink Supply Valve	[11]	Pump Valve Sensor 2
[6]	Suction Valve		

Suction Operation

A tube pump is used to suction ink. This pump generates negative pressure in Ink Tube by pressing Rotary Rollers against Ink Tube, thus suctioning ink. The suction amount of ink can be controlled greatly by pressing 3 rotary rollers against the tube one after another.
Pump Unit incorporates Pressure Sensor for detecting the pressure inside Buffer. If the pressure inside Buffer does not reach the predetermined value, Printer Controller PCB determines that a Suction Pump error has occurred, turns on ERROR Lamp, and displays an error code on the status monitor of the printer driver.
This page is only for reference. Pump Unit cannot be replaced.

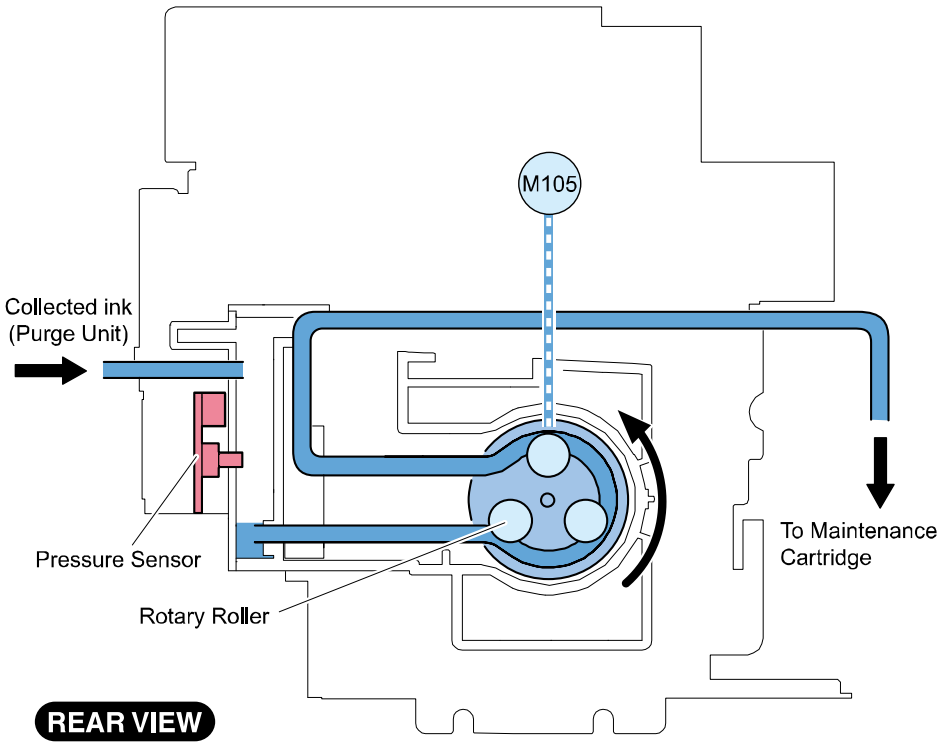

Valve Unit

Overview

Valve Unit blocks ink passages during wiping operation of Print Module, thus preventing dust from entering Printhead Nozzles. Ink passages are unblocked during ink loading, printing, and cleaning (excluding wiping operation).

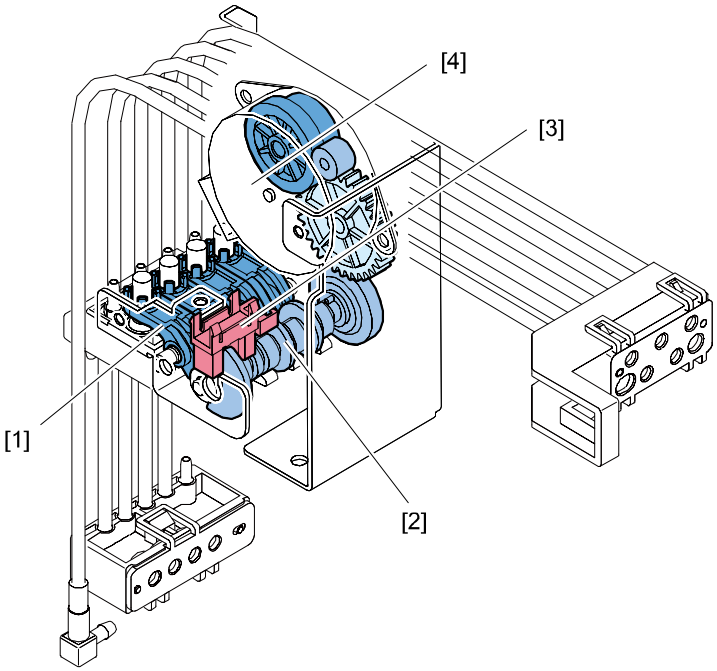

[1]	Cam Lever	[3]	Valve Sensor
[2]	Valve Cam	[4]	Valve Motor

Open/Close Operation

Valve Unit is operated by Valve Motor (M106). Valve Motor rotates Valve Cam to open/close Wipe Valve. The phase of Wipe Cam is detected by Valve Sensor (P107) and is controlled according to the number of Valve Motor drive pulses. These operations are controlled by Printer Controller PCB.

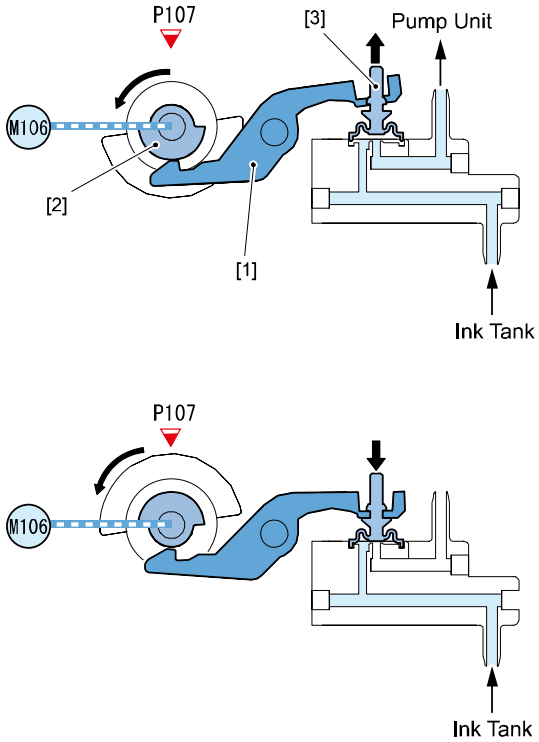

[1]	Cam Lever	[3]	Wipe Valve
[2]	Valve Cam		

Ink Tank

Overview

a) Ink Tank

The quantity of ink is memorized in EEPROM mounted on Ink Tank. The quantity of ink remaining in Ink Tank is detected according to the dot count based on the data stored in EEPROM. When the dot count reaches the predetermined value (equivalent to 184 ml), it is determined that no ink remains in Ink Tank, and LED on Operation Panel starts blinking. When more ink is used and Remaining Ink Sensor mounted on Ink Tank Holder Unit detects no ink, LED on Operation panel stops blinking and stays lit.

b) Keyed

Ink Tanks are keyed to prevent installing them in an incorrect slot. If an Ink Tank is inserted a wrong slot, it will stop where it's keyed. Ink will not begin to flow until it's properly installed. The external view of Ink Tank is shown below.

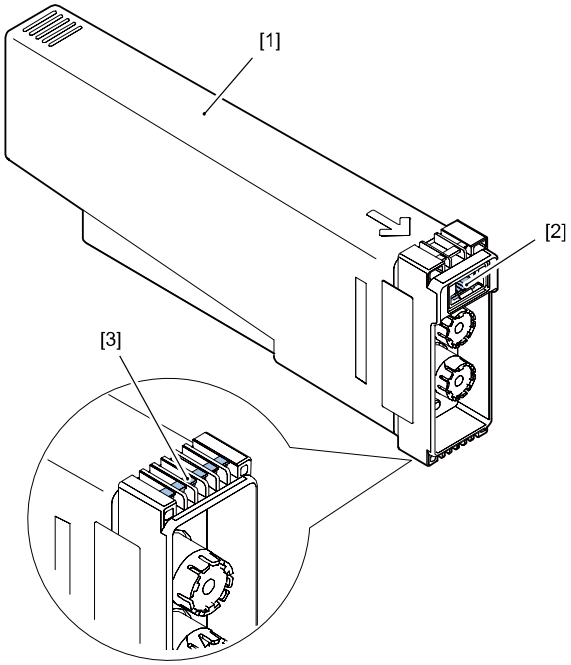

[1] Ink Tank

[2] Ink Tank ROM PCB

[3] Keys

CAUTION:

Do not shake the Ink Tank (Dye Ink/ CPX4**D**).
Shaking the ink tank will cause bubbles to form in the tank.
Bubbles in the tank can cause the Remaining Ink Sensor to improperly detect ink still in the tank and display message (xxxx Ink Empty/ error code: 20xx).

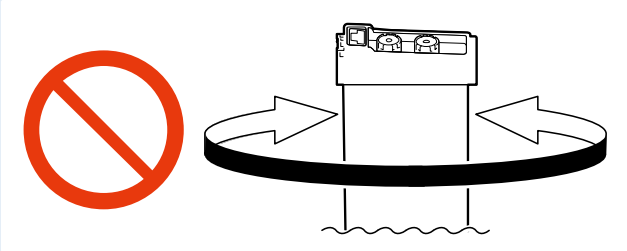

Maintenance Cartridge

Overview

a) Maintenance Cartridge
Maintenance Cartridge can contain a maximum of 450 ml of waste ink. The quantity of collected waste ink is memorized in EEPROM mounted on Maintenance Cartridge.

b) Detection of waste ink in Maintenance Cartridge
The quantity of waste ink collected in Maintenance Cartridge is measured according to the dot count.
When the quantity of waste ink reaches approximately 360 ml, Maintenance Cartridge Warning Lamp on Operation Panel blinks to indicate that Maintenance Cartridge is nearly full. Even when a warning message is displayed, printing can be continued.
When the quantity of waste ink reaches approximately 450 ml, Maintenance Cartridge Warning Lamp on Operation Panel stops blinking and stays lit to indicate that Maintenance Cartridge has become full.
When a dot count error occurs, Maintenance Cartridge Leakage Sensor detects that waste ink in Maintenance Cartridge is full.
Even when it is determined that Maintenance Cartridge is full according to the dot count, the current print job is executed to the end.
When it is determined that Maintenance Cartridge is full according to the result of detection by Maintenance Cartridge Leakage Sensor, Printer stops operating even if printing is in progress.
Once the full state of Maintenance Cartridge is detected, Printer will not operate until Maintenance Cartridge is replaced.

c) Temporary avoidance when Maintenance Cartridge is full
Service Utility allows the detection of full Maintenance Cartridge to be disabled temporarily as a workaround when Maintenance Cartridge becomes full based on the dot count while maintenance is taking place at the customer's premises.
Because this is a temporary workaround, replace Maintenance Cartridge quickly.

> ⚠ CAUTION:
> Care should be taken while removing the Maintenance Cartridge when the Maintenance Cartridge Full detection setting is temporarily disabled in Service Utility and the Maintenance Cartridge Leakage Sensor (Conductive Sensor) has detected a leak. The absorber in the Maintenance Cartridge will be saturated with ink and spillage can occur.

Item	Description
Detection method	Dot count
Near full capacity:	Approx. 360 ml
Printer operation in near full state	Printing can be continued.
Full capacity	Approx. 450 ml
Printer operation in full state	Operation stops
Others	Maintenance Cartridge Leakage Sensor (Conductive Sensor)

The external view of Maintenance Cartridge is shown below.

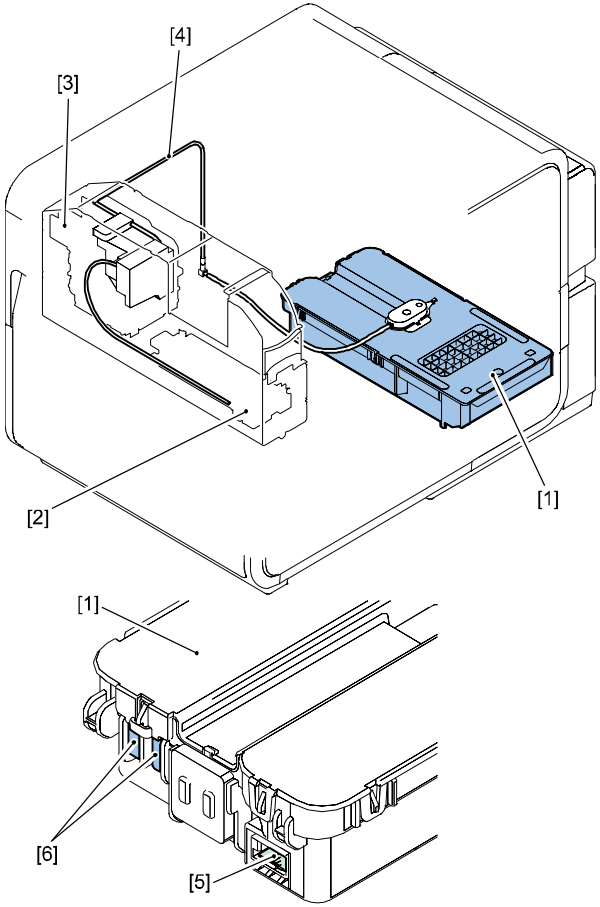

[1]	Maintenance Cartridge	[4]	Waste Ink Tube
[2]	Purge Unit	[5]	Maintenance Cartridge ROM PCB
[3]	Pump Unit	[6]	Maintenance Cartridge Leakage Sensor

Ink Leakage Detection

Overview

a) Ink Leakage Sensor

Ink Leakage Sensor is mounted on Base Plate of Printer.
If ink leakage occurs inside Printer (in particular, around the back of Ink Tank Unit), it is detected by Ink Leakage Sensor.
When ink leakage is detected, Printer Controller PCB stops printing, turns on ERROR lamp, and displays an error code on the status monitor of the printer driver.
The external view of Ink Leakage Sensor is shown below.

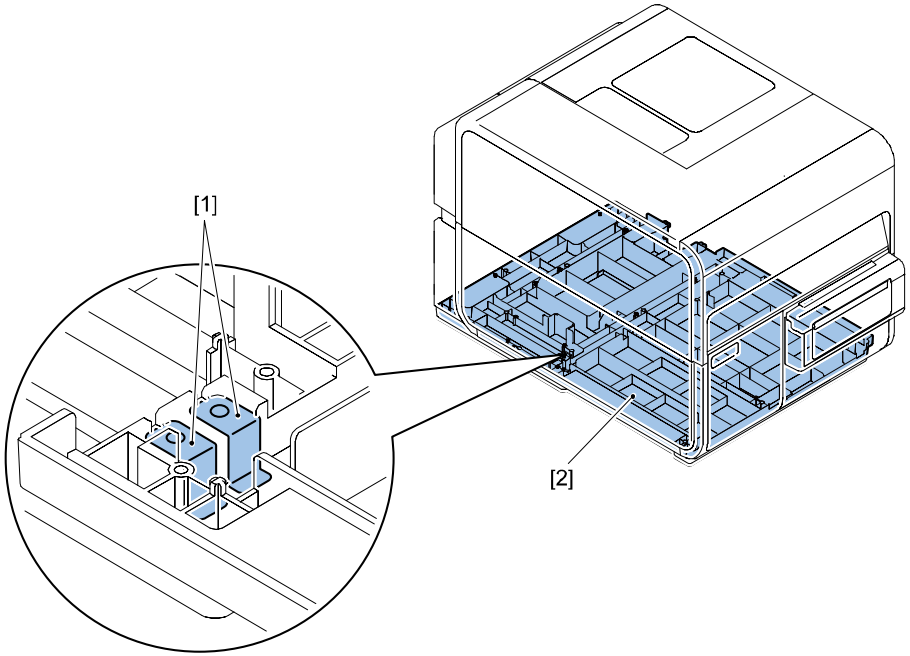

[1] Ink Leakage Sensor [2] Base Plate

Feeder/Transport System

Overview

Main Parts Configuration

Feeder/Transport System feeds and transports paper. It consists of Roll Drive Unit, Paper Guide Unit and Transport Unit.
The basic configuration of Feeder/Transport System is shown below.

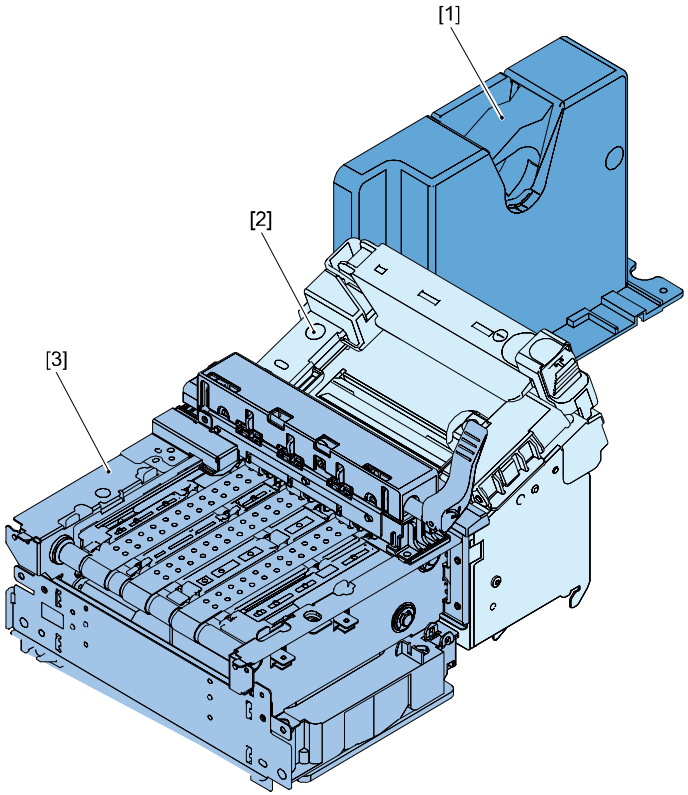

[1] Roll Drive Unit
[2] Transport Unit
[3] Paper Guide Unit

Main Parts Configuration

This printer can feed 2 kinds of paper: roll paper and fanfold paper. Roll paper is held on Roll Drive Shaft, and when roll paper is attracted towards Paper Transport on Transport Belt and Pinch Rollers, its transport force causes Roll Drive Shaft to rotate to feed paper by required length. When starting the next print job or resuming the paused print job, Roll Drive Shaft is rotated in take-up direction to return leading edge of paper to Print Start Position. Roll Drive Shaft is driven through rotation of Roll Motor (M101). Fanfold paper can be fed by removing Roll Holder and placing Printer into fanfold paper mode from Printer Driver.

Fed paper is transported by Transport Belt and Pinch Rollers as it is sucked by Suction Fan (FM102) in Transport Unit. Transport Belt is driven through rotation of Transport Motor (M102) in Transport Unit. Print Start Position is detected by TOF (Top of Form) Sensors (LED2 and Q1/transparent) or by TOF Sensor (PS2/reflective), and paper transport failures are detected by TOF Sensors (LED2 and Q1/transparent), TOF Sensor (PS2/reflective), Encoder Sensor (PS1), Transport Sensor 1 (P 109) or Transport Sensor 2 (P110). Paper Sensor (PS1) detects presence or absence of paper, while Trailing Edge Sensor (PS1) detects the trailing edge of paper.

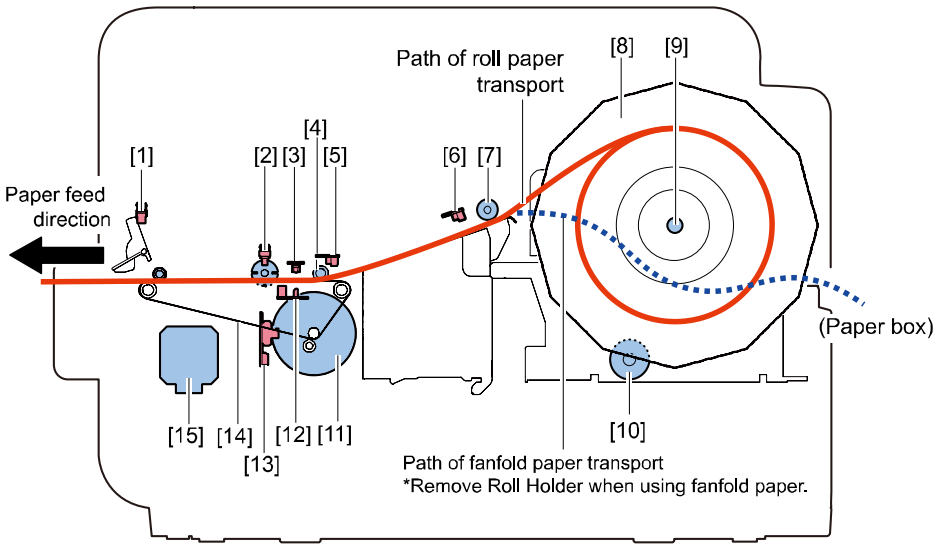

[1]	Transport Sensor 2 (P110)	[9]	Roll Drive Shaft
[2]	Transport Sensor 1 (P109)	[10]	Roll Motor (M101)
[3]	Upper TOF Sensor (Q1)	[11]	Encoder
[4]	Pinch Roller	[12]	Lower TOF Sensor (PS2/LED2)
[5]	Paper Sensor (PS1)	[13]	Encoder Sensor (PS1)
[6]	Paper Sensor (PS1)	[14]	Transport Belt
[7]	Paper Holding Wheel	[15]	Transport Motor (M102)
[8]	Roll Holder		

Various Types of Control

Feeder System

Overview

Paper loaded on Roll Holder is held by Roll Drive Shaft. When paper is attracted towards Paper Transport on Transport Belt and Pinch Rollers, its transport force causes Roll Drive Shaft to rotate to feed paper by required length. When next print job is executed or paused print job is resumed, Roll Drive Shaft is rotated in take-up direction to return leading edge of paper to Print Start Position. Roll Drive Shaft is driven through rotation of Roll Motor (M101). Roll Motor (M101) drives Roll Drive Shaft by way of gear. Drive Gear mounted on Roll Drive Shaft is equipped with Torque Limiter and One-Way Clutch. When paper is fed, Torque Limiter keeps it under back-tension to prevent slacks. When paper is taken up, One-Way Clutch transfers driving force from Roll Motor (M101) to Roll Drive Gear to take up paper.

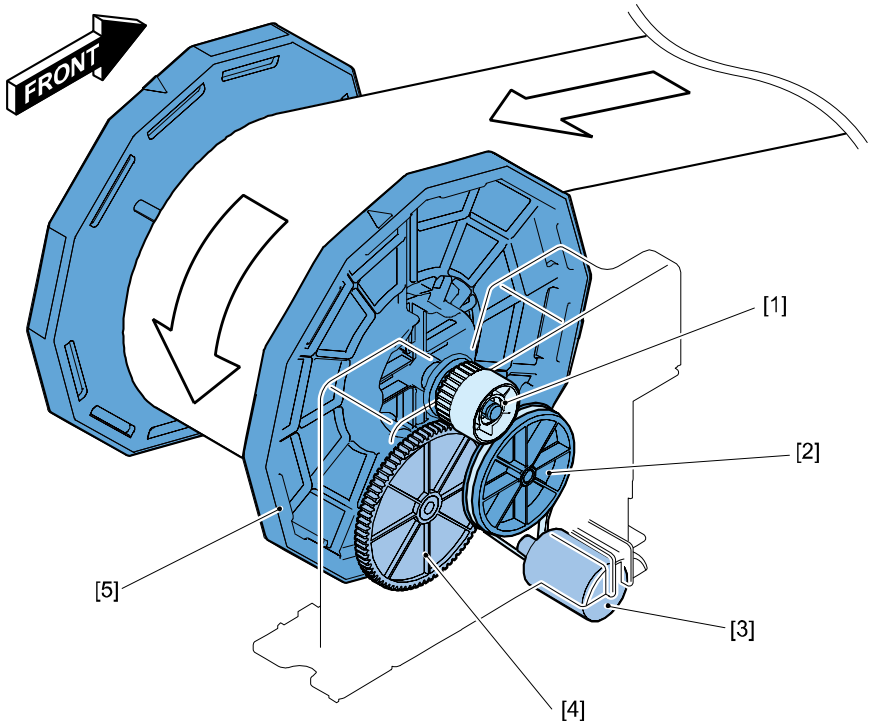

[1]	Torque Limiter	[4]	Drive Gear
[2]	Pulley	[5]	Roll Holder Unit
[3]	Roll Motor (M101)		

Paper Width Detection

Width of paper loaded in Paper Guide Unit is detected by Paper Width Sensor (VR101) as Transport Guides move to rotate VR101 by way of gear.

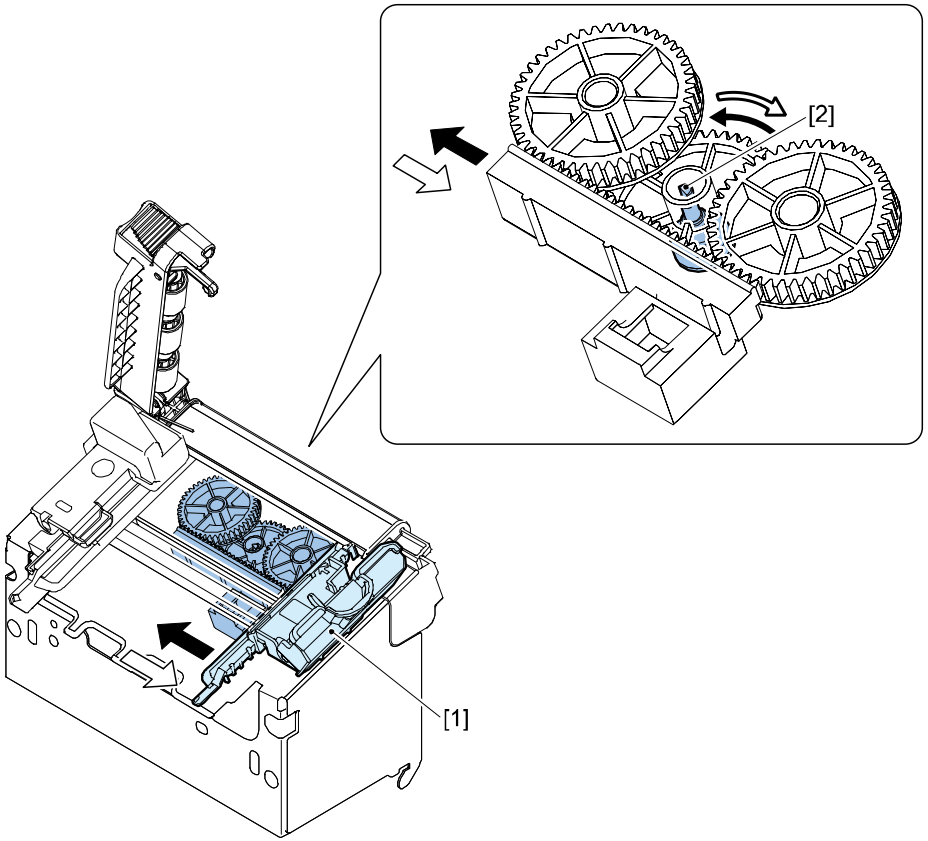

[1] Transport Guide [2] Paper Width Sensor (VR101)

Paper Trailing Edge Detection

When paper loaded in Paper Guide Unit runs out, its trailing edge reaches Paper Guide Unit and detected by Trailing Edge Sensor (PS1). Trailing Edge Sensor (PS1) is reflective sensor. When the trailing edge of paper is detected, Printer Control PCB stops paper transport and print operation and displays paper out condition in Status Monitor.

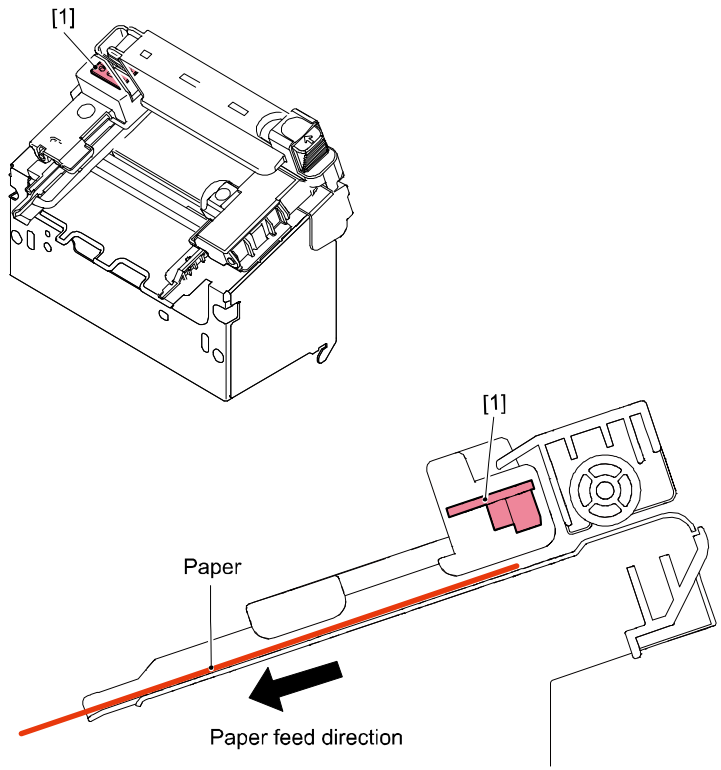

[1] Trailing Edge Sensor(PS1)

Transport System

Overview

Paper is suctioned onto 3 Transport Belts by Paper Suction Fan (FM102) of Transport Unit, transported under Printheads at a constant speed by Pinch Rollers and Spur Unit included in Upper Unit, and finally ejected to Stacker Tray. Transport Belts are driven by Transport Motor (M102).
The leading edge of paper is detected at the entrance to Transport Unit, determining the print start position.

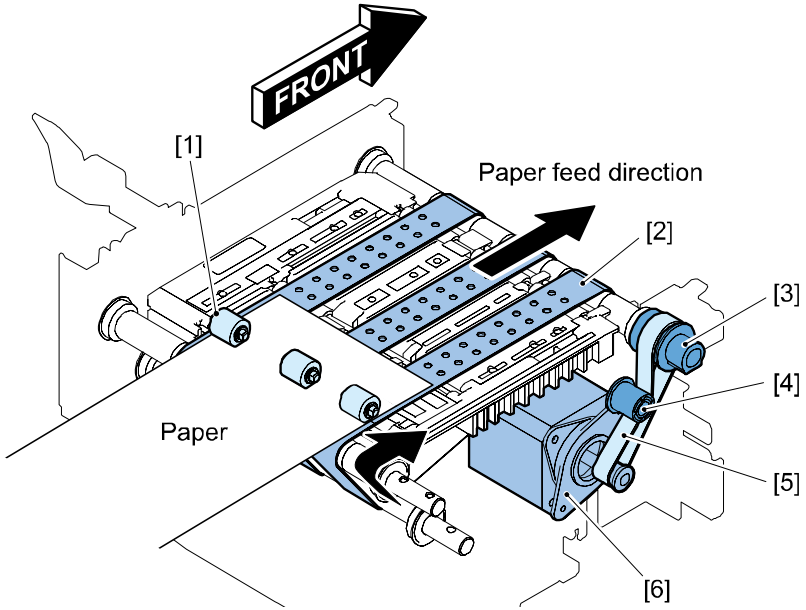

[1]	Pinch Roller	[4]	Tensioner Roller
[2]	Transport Belt	[5]	Timing belt
[3]	Pulley	[6]	Transport Motor (M102)

Paper Detection

Reflective and transparent TOF (Top of Form) Sensors are installed at entrance of Transport Unit. Reflective sensor detects TOF mark reflected on back of paper, while transparent sensor detects difference in quantity of transmitted light between mount and paper portions of label paper to determine print timing or detect jammed paper. Individual sensor functions are described below.

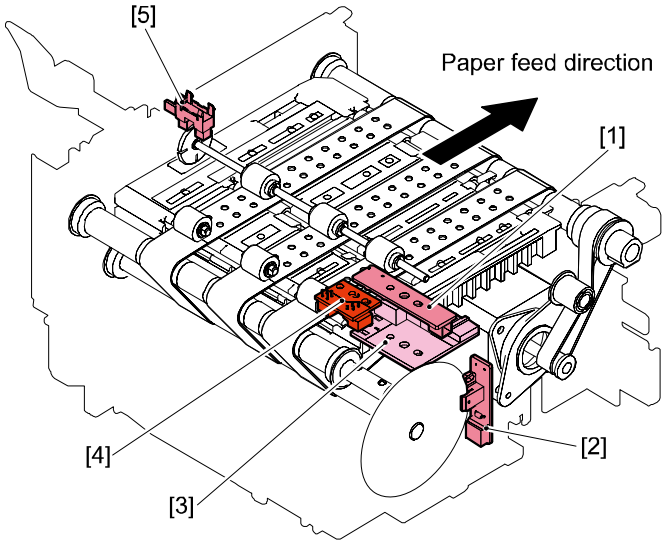

[1]	Upper TOF Sensor (Q1)	[Receiver side of transparent sensor. Coupled with [3] Lower TOF Sensor (PS2/LED2) to detect the leading edge of paper, paper gaps and paper jams.
[2]	Encoder Sensor (PS1)	Detects length of paper transport on rotation of Transport Belt though slit in cord wheel as Transport Belt is driven.
[3]	Lower TOF Sensor (PS2/ LED2)	Sensor PCB mounted with Lower TOF Sensor (LED2), or emitter side of transparent sensor, and Reflective Sensor (PS2). Lower TOF Sensor (LED2) is coupled with [1] Upper TOF Sensor (Q1), or receiver side, to detect the leading edge of paper, paper gaps and paper jams. Reflective Sensor (PS2) read TOF mark to detect the leading edge of paper, paper gaps and paper jams.
[4]	Paper Sensor (PS1)	Detects presence or absence of paper as it is fed.
[5]	Transport Sensor 1 (P109)	Detects that paper is transported correctly.

Paper Suction Operation

Paper is suctioned toward Transport Belts by suction air generated by Paper Suction Fan flowing through holes on Platen and Transport Belts, thus enhancing paper transport accuracy.

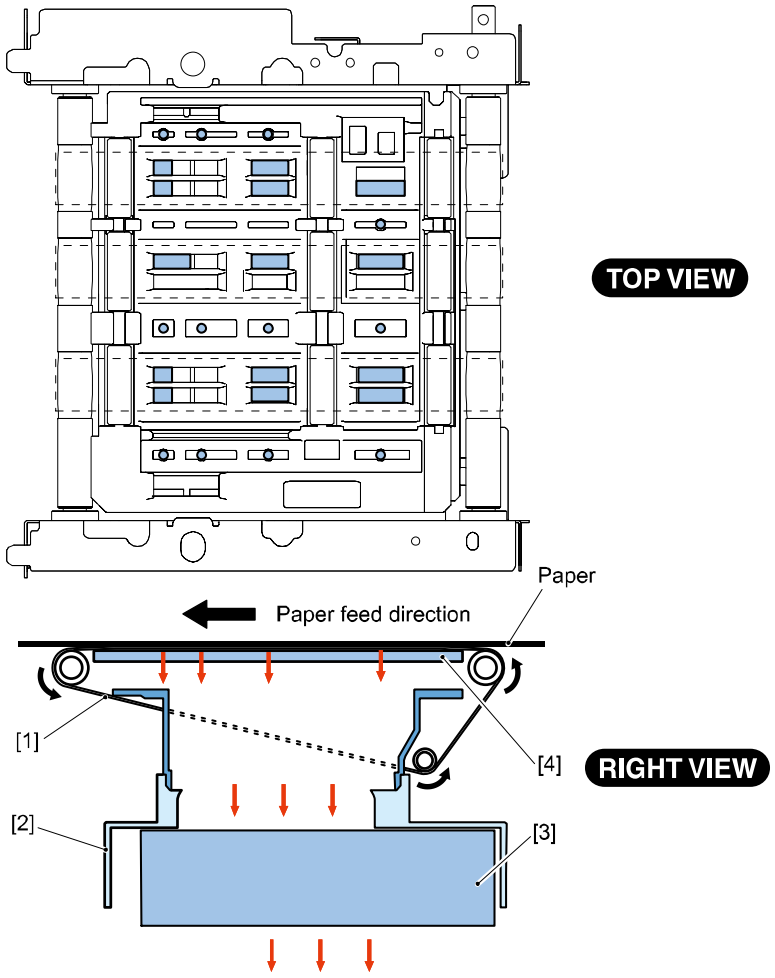

[1]	Transport Belt	[4]	Paper Suction Fan(FM102)
[2]	Duct	[5]	Platen

Ink Mist Collection

As Printheads splash ink onto paper to print, traces of ink mist floating during printing or bouncing back from paper are generated on Transport Unit. Such ink mist pass through holes in Platen and are collected on Mist Absorber through Mist Filter. Mist Filter is included in Transport Unit and replaced at same time.

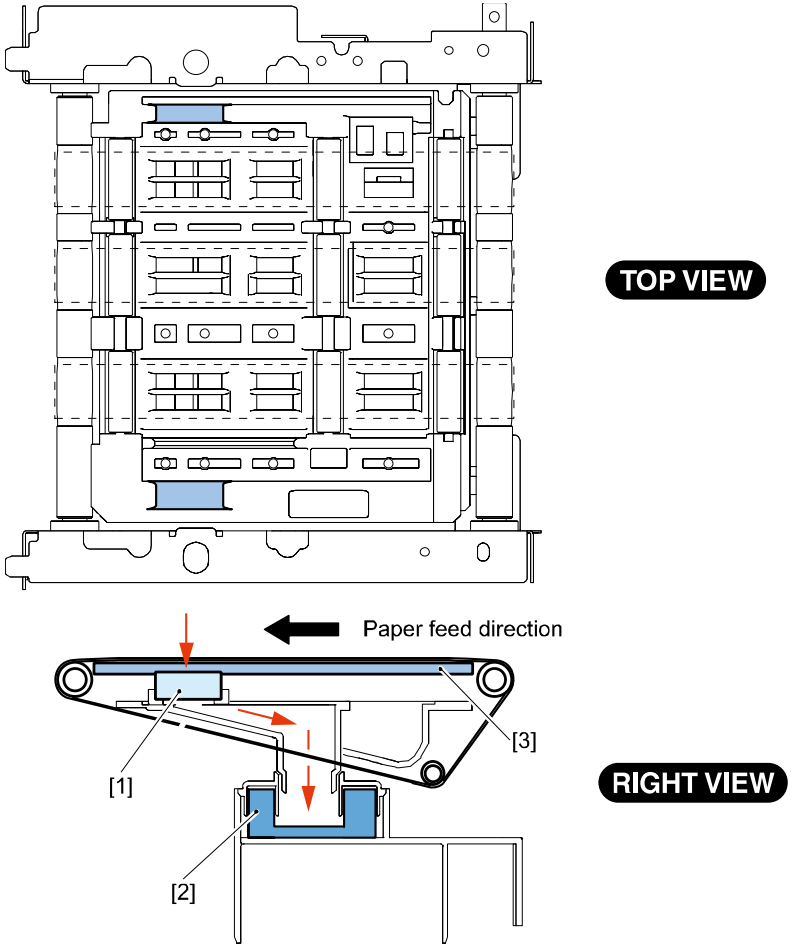

[1]	Mist filter	[3]	Platen
[2]	Mist absorber		

Paper Feed and Transport Operating Sequence

Basic sequence of Paper Feeding and Transport System is shown below.

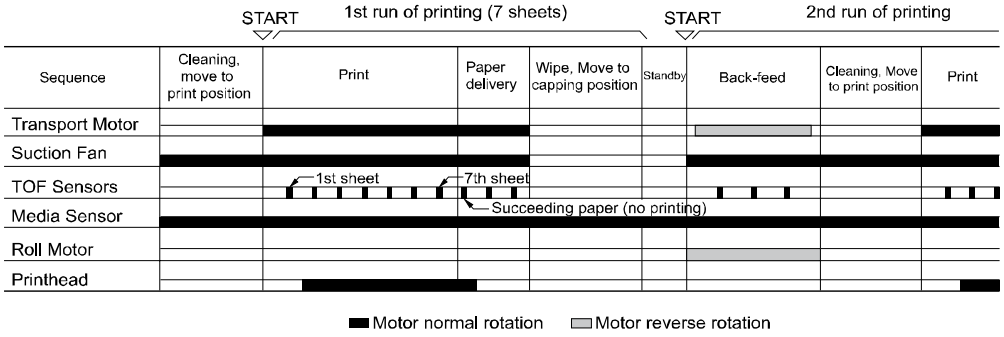

Jam Detection

Overview

The microcomputer reads signals from the sensor at the pre-stored check timings to determine whether paper is fed normally or erroneously. Upon detection of an error, the microcomputer suspends printing and stops Printer. After Printer stops, the microcomputer displays "Operator Call Error" on the display panel and turns on Error Lamp.

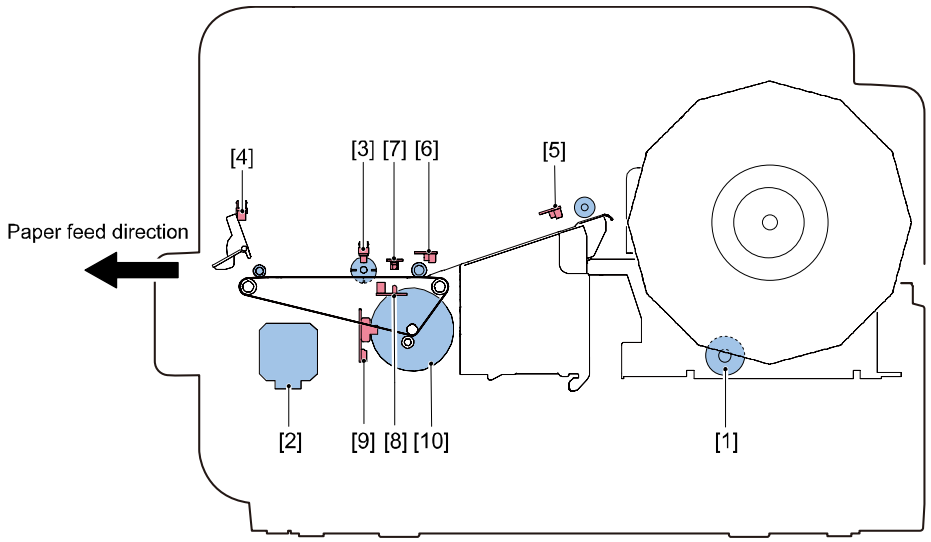

[1]	Roll Motor (M101)	[6]	Paper Sensor
[2]	Transport Motor (M102)	[7]	Upper TOF Sensor (Q1)
[3]	Transport Sensor 1(P109)	[8]	Lower TOF Sensor (PS2/LED2)
[4]	Transport Sensor 2(P110)	[9]	Encoder Sensor (PS1)
[5]	Trailing Edge Sensor (PS1)	[10]	Encoder

Jam Detection Timings

Jam detection timings and jam codes are summarized below.

Jam name	Jam code	Detection Timing
Paper jam error 1	1301	During printing, the trailing edge of paper could not be detected by TOF sensor.
	1302	During printing, the leading edge of paper could not be detected by TOF sensor.
	1304	Paper detected by TOF Sensors could not be detected by optional cutter TOF Sensors.
	1305	Auto-Cutter TOF Sensor could not detect the trailing edge of paper.
	1306	Auto-Cutter TOF Sensor could not detect the leading edge of paper.
	1309	Transport Sensor 1 did not respond.
	130B	Paper is folded around Delivery Port.
	130C	Paper has been fed too fast.
	13E1	Only 1% or less of encoder signal is received even if Transport Motor is driven. (Transport Belts drive is not transmitted to the encoder.)
	13E2	Only 90% or less of encoder signal is received during paper transport. (Transport Belts are slipping on shafts.)
Paper jam error 2	1D09	Transport Sensor 1 did not respond.
	1D0B	Paper is folded around Delivery Port.
	1D11	During forward feed, TOF mark could not be detected by TOF Sensor in the midst of top of form feeding operation.
	1D12	TOF sensor could not detect marks while locating paper position during backward feeding.
	1DE1	Only 1% or less of encoder signal is received even if Transport Motor is driven. (Transport Belts drive count is not transmitted to the encoder.)
	1DE2	Only 90% or less of encoder signal is received during paper transport. (Transport Belts are slipping on shafts.)

Paper jam error 1: A jam that has occurred during printing.

Paper jam error 2: A jam that has occurred other than during printing (during paper setting or manual feed).

Operating Panel

Overview

Operating Panel is located in upper part of front of Printer. It consists of 4 control keys and 7 LED lamps.
Operating key signals are controlled by Printer Controller PCB.

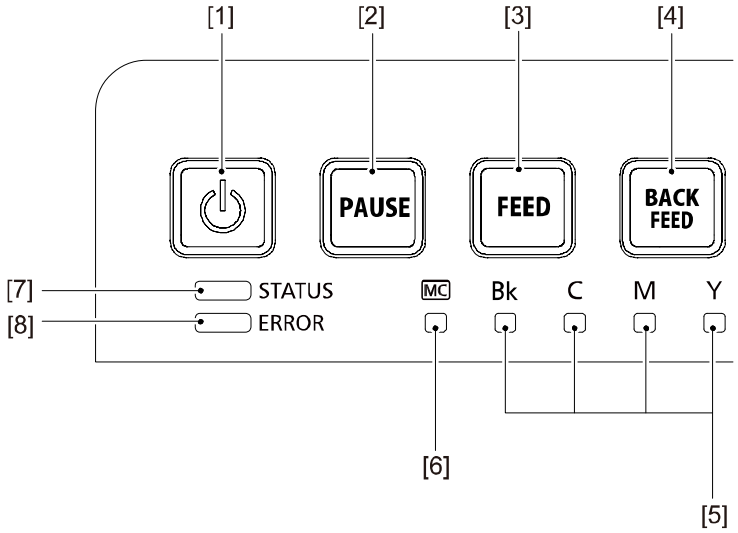

[1]	Power Key	[5]	Ink Warning Lamp
[2]	[PAUSE] Key	[6]	Maintenance Cartridge Lamp
[3]	[FEED] Key	[7]	[STATUS] Lamp
[4]	[BACK FEED] Key	[8]	[ERROR] Lamp

Operations

Operating key and LED lamp functions are summarized below.

[1]	Power Key	・Continuously lit : Power-on state ・Flashing : Sleep state ・Off : Power-off state
[2]	[PAUSE] Key	・Printing : Press to suspend printing in progress. Press and hold it for about 1 second to cancel all jobs and end printing. ・Paused : Press to resume printing. Press and hold it for about 1 second to cancel all jobs and end printing.
[3]	[FEED] Key	・Press to feed paper by 1 sheet. Press and hold it to feed paper continuously.
[4]	[BACK FEED] Key	・Press to feed paper backward by 1 sheet.
[5]	Ink Warning Lamp	・Continuously lit : Running out of ink, or Ink Tank not installed ・Flashing : Low on ink ・Off : Ink fully available
[6]	Maintenance Cartridge Lamp	・Continuously lit : Full ・Flashing : Nearly full ・Off : Enough space in Cartridge
[7]	[STATUS] Lamp	・Continuously lit : Online state ・Flashing : Receiving data ・Off : Printing disabled state (Operator Call Error/Service Call Error has occurred, or Printer is in sleep or pause state.)
[8]	[ERROR] Lamp	・Continuously lit : Operator Call Error (can be resolved in user operation) ・Flashing : Service Call Error ・Off : Normal

Sleep Mode

Power saver mode is supported to save standby power. If Printer has been left idle or has not received print data for a certain period of time or longer while it is in online or offline state, it enters Sleep (power saver) Mode automatically. Printer exits Sleep Mode when Power key is pressed on Operation Panel or print data is received from Host Computer.

Conditions for Entering Sleep Mode
Printer enters Sleep Mode upon completion of shutdown process under any of following conditions:

- Sleep mode button is pressed from Printer Driver, except when there is print data yet to be printed.
- Specified interval of time has passed while Printer is in ready state (default: 4 minutes and time to enter Sleep Mode is variable from Printer Driver). It is assumed that Printer is in User Mode and that Operator Call Errors have not occurred or that there is no print data yet to be printed.

*1. Except when Service Call Errors are occurring.
*2. Various error notifications are suppressed while Printer is in Sleep Mode.
*3. Not displayed in Status Monitor.
*4. Because Printer is unable to detect error clearing while it is in Sleep Mode, Operator Call Errors and warnings existing at the time of its migration to Sleep Mode are cleared once.

External Interface

Overview

Printer System and Interfaces are controlled by Printer Controller PCB. Printer Controller PCB supports the following 3 types of external interface, which are each used in a unique manner:

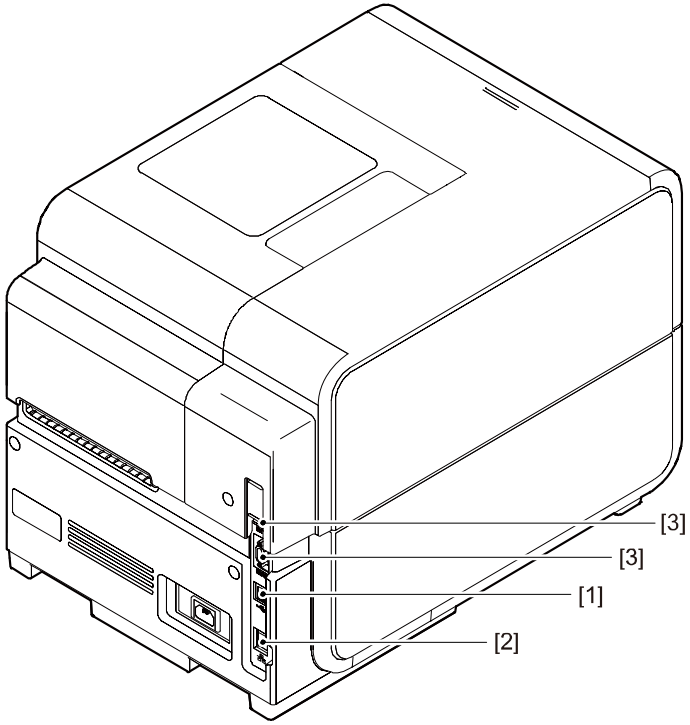

[1]	USB connector	Connected to Host Computer
[2]	LAN connector	Connected to Host Computer
[3]	RS-232C connector *	Use the upper connector to connect bar-code reader Use the lower connector to connect an external control device

* RS-232C Connector is provided for future expansion. Currently, it is not provided with any function.

3. Periodical Service

Periodical Service Operation Item

No.	Category	Part Name	Part Number	Quantity Used	Action	Work Interval	Adjustment	Remarks
[1]	Imaging System	Printhead	98-0790015-30LF	4	Replacement	1,000,000 sheets(*1)	Yes	(*1) Number of printing, 4×3 in size, 7.5% duty When lifetime of Printhead has expired, warning "05xx" is displayed and printing can be continued.
[2]		Purge Unit	98-0790013-20LF	1	Replacement	7,000 times (*2)	Yes	(*2) Number of printing, 4×3 in size.Approximate 1,200,000 sheets has printed. • Service call error "1701" is displayed and Printer stops operating. Replace Purge Unit. • When 80% of lifetime of Purge Unit has used, warning "0601" is displayed and printing can be continued.
[3]		Blade Cleaner	98-0790012-00LF	1	Replacement	7,000 times (*2)	-	*2) Number of printing, 4×3 in size. Approximate 1,200,000 sheets has printed. • Service call error "1801" is displayed and Printer stops operating. Replace Blade Cleaner. • When 80% of lifetime of Blade Cleaner has used, warning "0701" is displayed and printing can be continued.
[4]	Paper Feed and Transport System	Transport Unit		1	Replacement	1,200,000 sheets (*3)	Yes	*3) Number of printing, 4×3 in size. Approximate 1,200,000 sheets has printed • Service call error "2A01" is displayed and Printer stops operating. Replace Transport Unit.
[5]		TOF Sensor	-	-	Cleaning	As needed	-	Clean with cloth soaked with water and wrung tight.

Parts layouts are shown below.

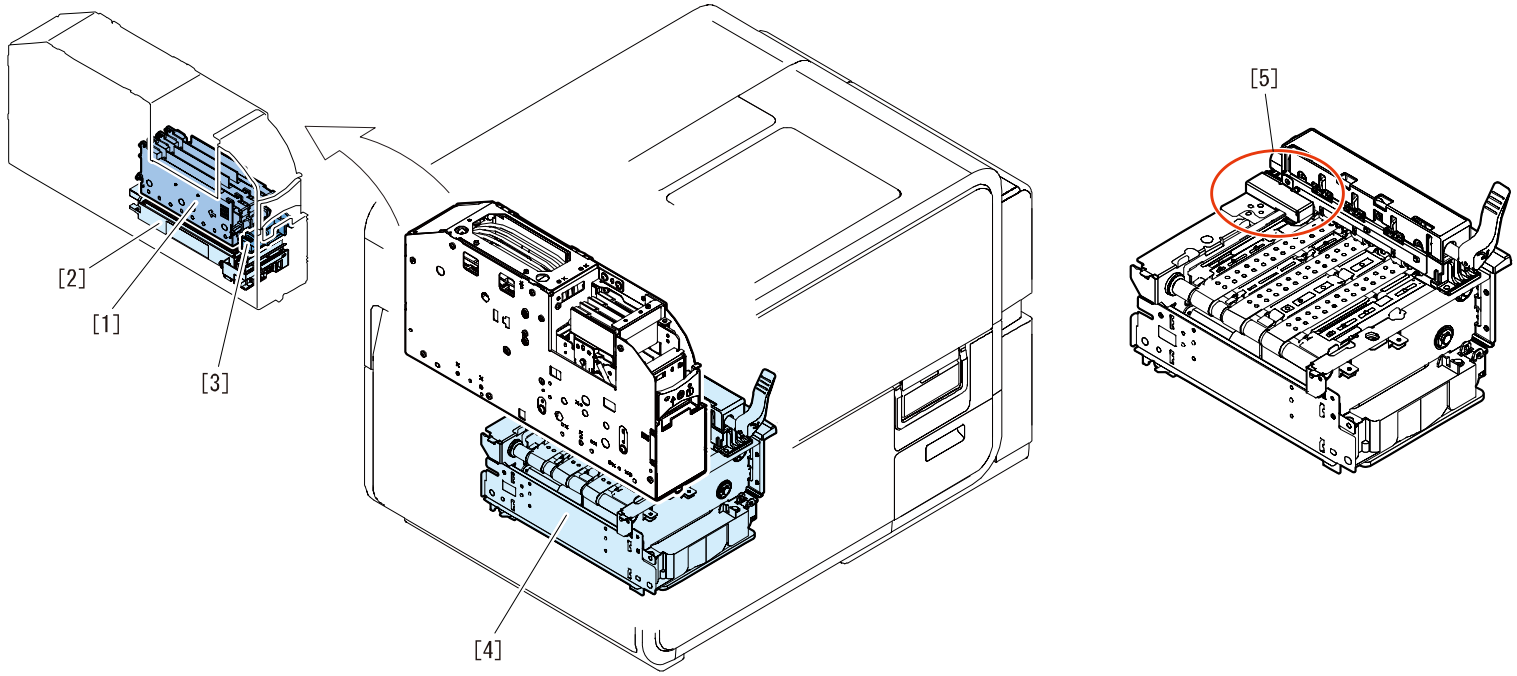

4. Parts Replacement and Cleaning

Part Replacement Adjustment List

This section introduces what actions are needed to fulfill market services when replacing parts.

Target Part	Using Tools(*1) or not	Action Before Parts Replacement	Action After Part Replacement
Print Module	Yes	• Ink draining(*2)	• Ink loading • Various Adjustment Value Entry (labeled)(*3) • Image Position Adjustment
Printhead	Yes	• Ink draining • Printhead moves to replace position	• Ink loading • Image Position Adjustment
Purge Unit	Yes	• Purge Unit moves to replace position	• Adjustment of mechanical blade position(*4) • Adjustment Value Entry(*3) • Reset durables counter(*5)
Blade Cleaner	Yes	• Blade Cleaner moves to replace position	• Reset durables counter(*5)
Transport Unit	Yes	-	• Reset durables counter • Image Position Adjustment
Paper Guide Unit / Paper Width Sensor	Yes	-	• Adjust Paper Width Sensor
Valve Unit / Ink Tank Holder Unit / Pump Unit	Yes	• Ink draining(*2)	• Ink loading
Printer Controller PCB	Yes	• Data retrieve from Printer to PC(*6)	• Send data from PC to Printer • Release error(*8) • Update to the latest firmware version.
DC Power Supply PCB Unit	Yes	-	• Release error(*7)

(*1) Service Utility
(*2) These parts are not durable parts. Replacement of these parts are at the time of trouble mainly. When service call error occurs, these is a case it is impossible to drain ink. When [Head] of [Consumable Parts Replacement] in Service Utility can not be performed due to a service call error, Ink is drained by performing [Shipping the defective printer] as much as possible even when a service call error is occurring. But this is not possible if Maintenance Cartridge is full or ink leakage is occurring.
(*3) There are labels indication on the parts.
(*4) Blade adjustment tool come with service part.
(*5) Replacing parts using service utility, it is cleared automatically.
(*6) In the case, it can not be done to retrieve the data from Printer to PC, enter various data below. after replacement of Printer Controller PCB
(*7) In the case, power supply error (error code 0211 to 0215) occurs, clear the error using Service Utility.
- Service Utility > Parts Replacement > Power Supply Unit Replacement > Release the Error

(*8) In the case, power supply error (error code 0105 to 0109) occurs, clear the error using Service Utility.
- Service Utility > Parts Replacement > Power Supply Unit Replacement > Release the Error

⚠ CAUTION:

Be sure to wear a grounding wrist strap prior to the service work to prevent electrostatic destruction of Printheads, PCB's, etc.

List of Parts

List of External Covers

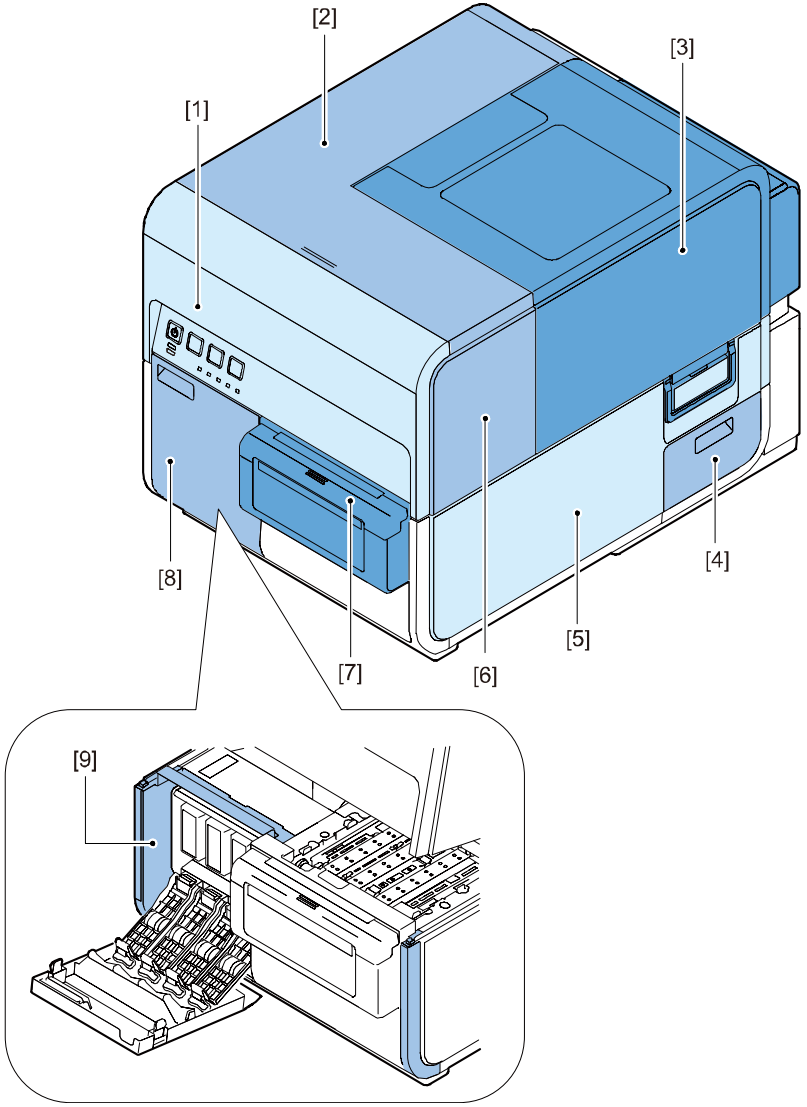

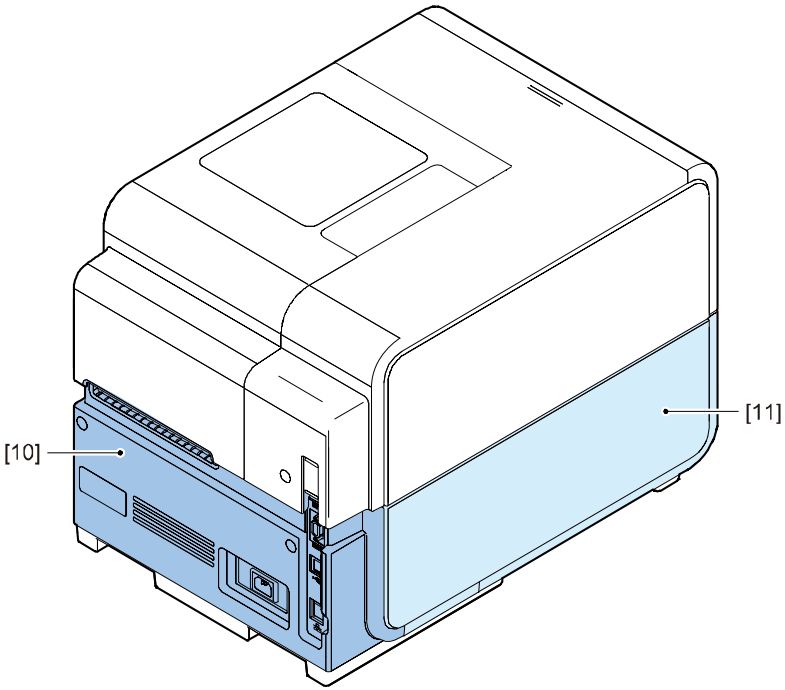

Symbol	Part Name	Reference
[1]	Operation Panel	
[2]	Upper Cover	
[3]	Roll Cover	
[4]	Maintenance Cartridge Door	
[5]	Right Cover	
[6]	Maintenance Cover	
[7]	Cutter Cover	
[8]	Ink Tank Door	
[9]	Front Inner Cover	
[10]	Rear Cover	
[11]	Left Cover	

List of Main Units / Parts

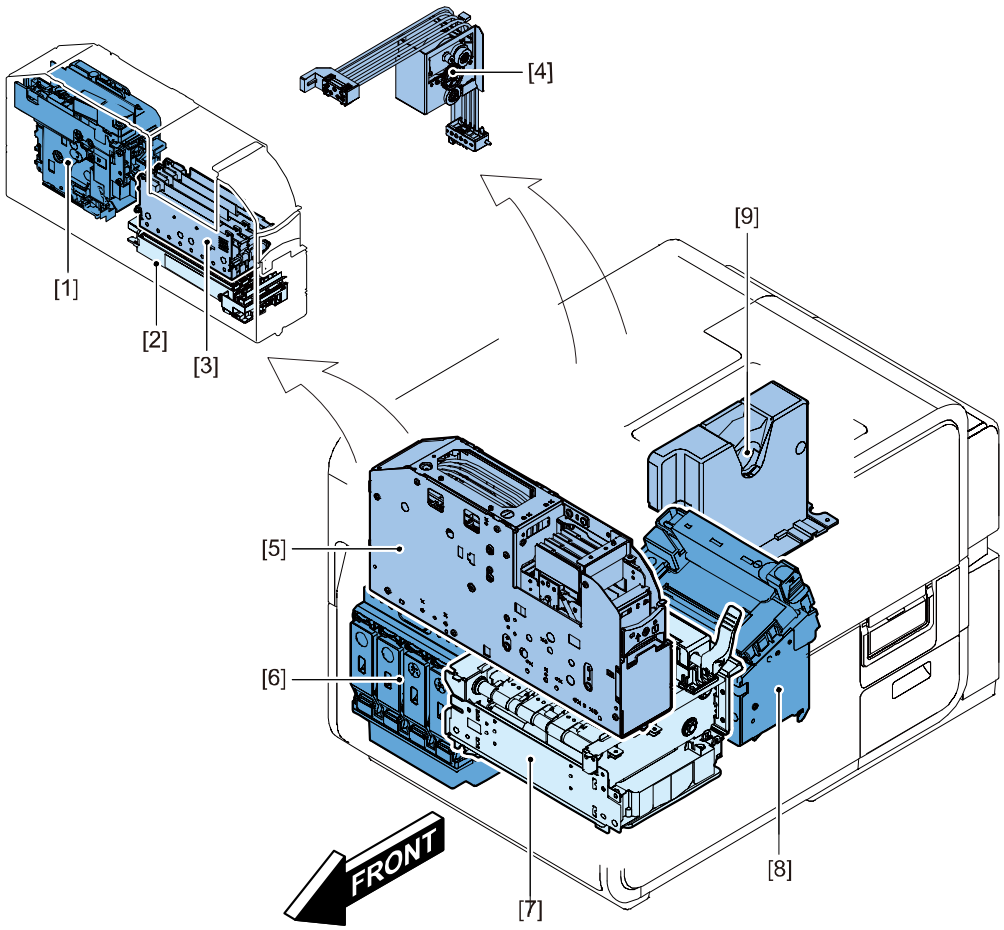

Symbol	Part Name	Reference
[1]	Pump Unit	
[2]	Purge Unit	
[3]	Printhead Unit	
[4]	Valve Unit	
[5]	Print Module	
[6]	Ink Tank Holder Unit	
[7]	Transport Unit	
[8]	Paper Guide Unit	
[9]	Roll Drive Unit	

Replacement Parts and Consumables

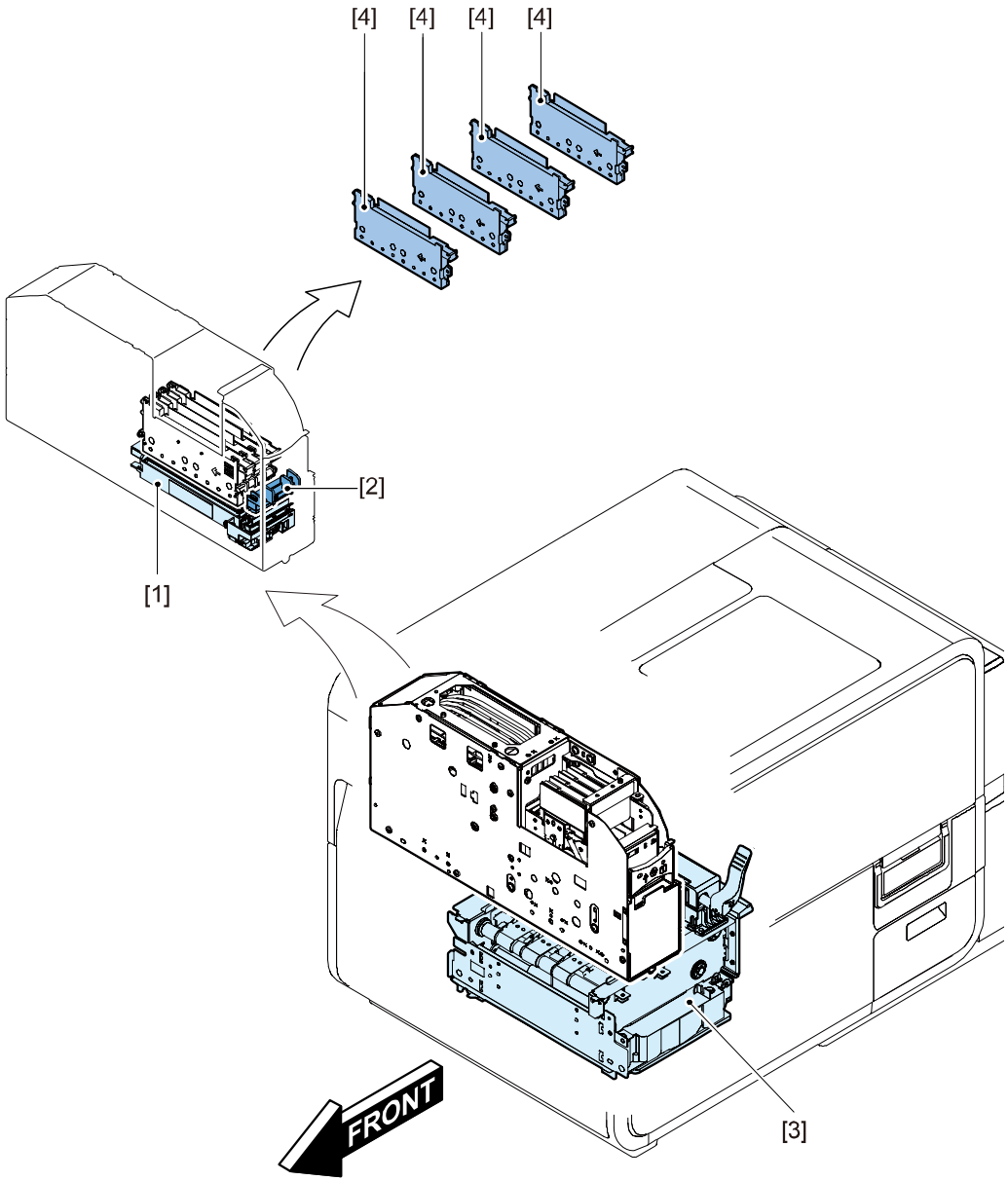

Symbol	Part Name	Part Number	Reference
[1]	Purge Unit	98-0790013-20LF	
[2]	Blade Cleaner	98-0790012-00LF	
[3]	Transport Unit		
[4]	Printhead	98-0790015-30LF	

List of Motors

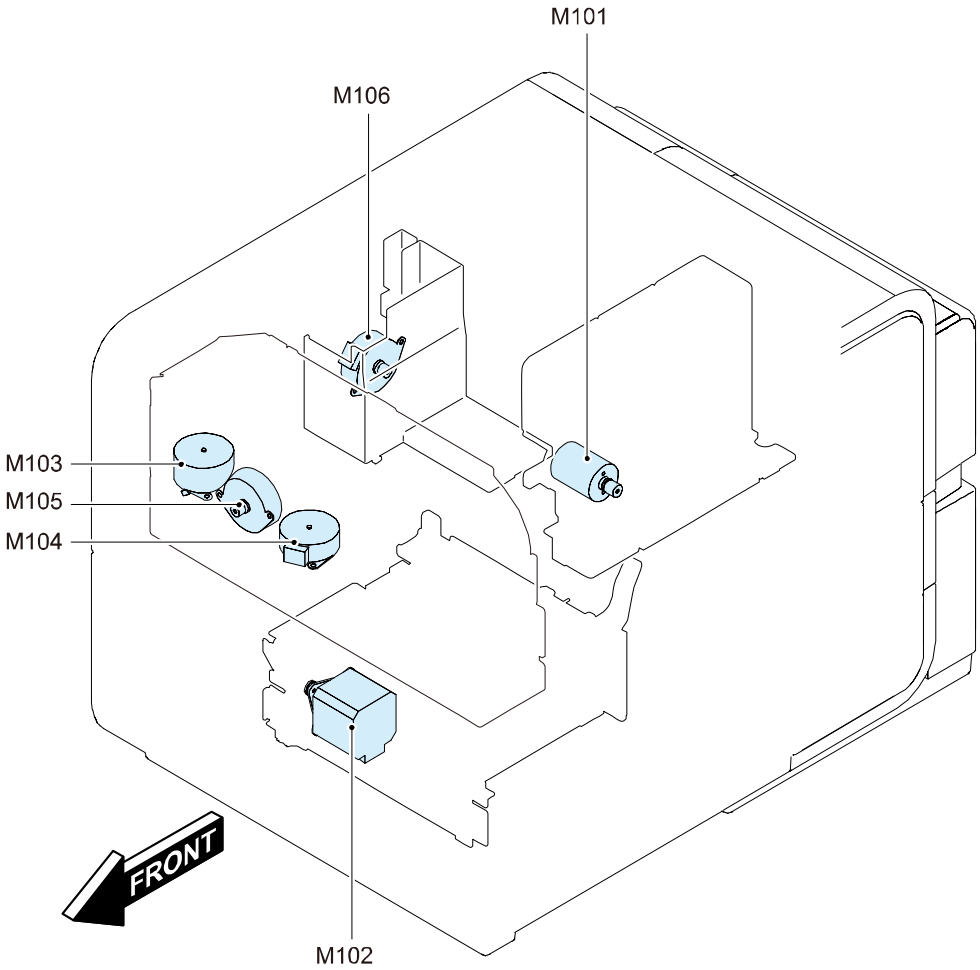

Symbol	Part Name	Main Unit	Reference
M102	Transport Motor	Transport Unit	
M104	Printhead Lift Motor	Print Module	
M105	Pump Motor	Pump Unit	
M103	Purge Motor	Print Module	
M106	Valve Motor	Valve Unit	
M101	Roll Motor	Roll Drive Unit	

List of Solenoids and Clutches

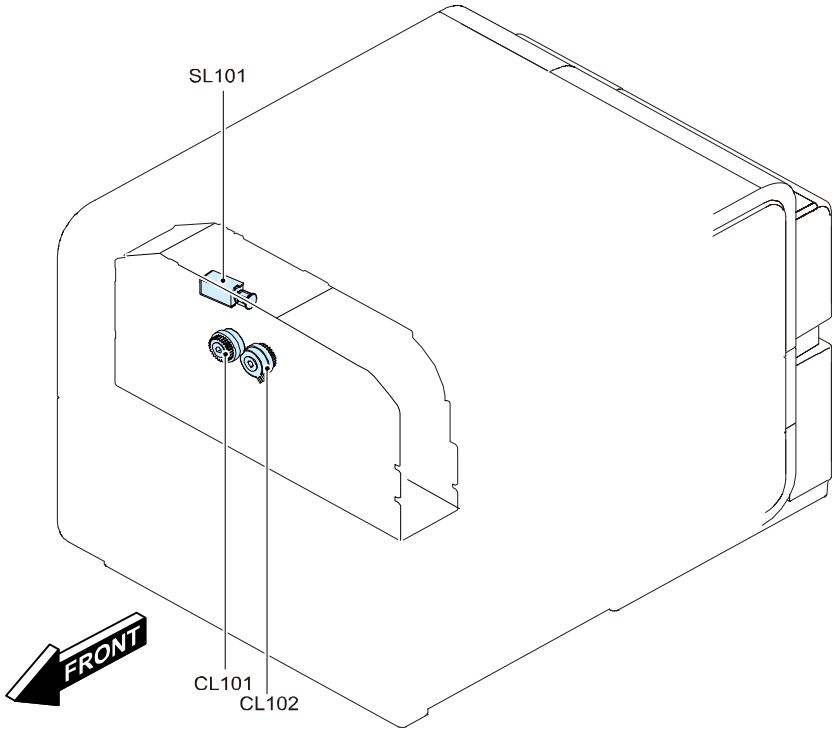

Symbol	Part Name	Main Unit	Reference
SL 101	Buffer Solenoid	Pump Unit	
CL 101	Valve Clutch	Pump Unit	
CL 102	Pump Clutch	Pump Unit	

List of Fans

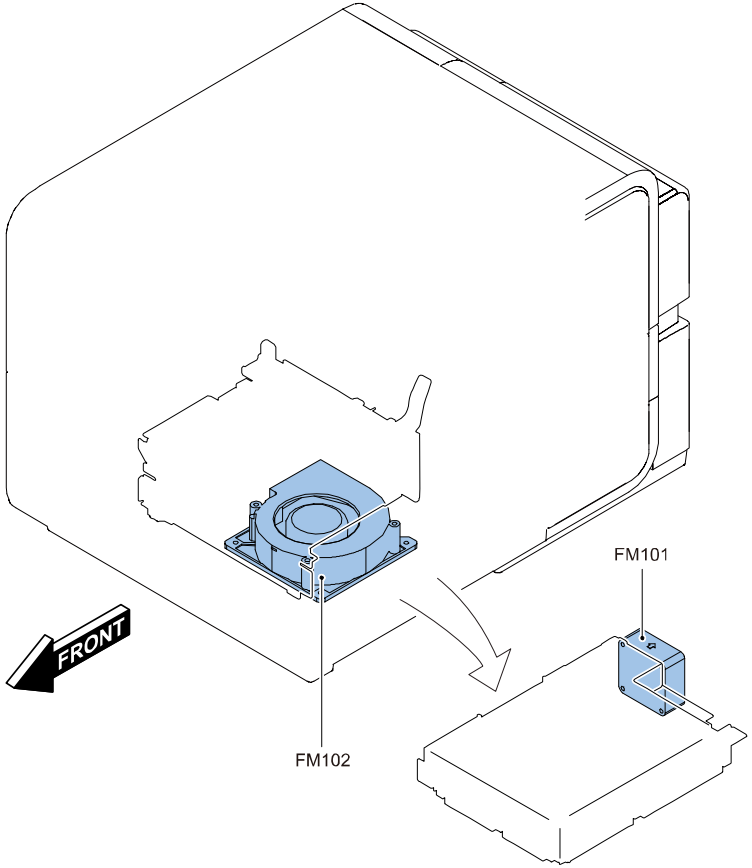

Symbol	Part Name	Main Unit	Reference
FM 102	Paper Suction Fan	Transport Unit	
FM 101	Power Supply Fan	Transport Unit	

List of Sensors _1

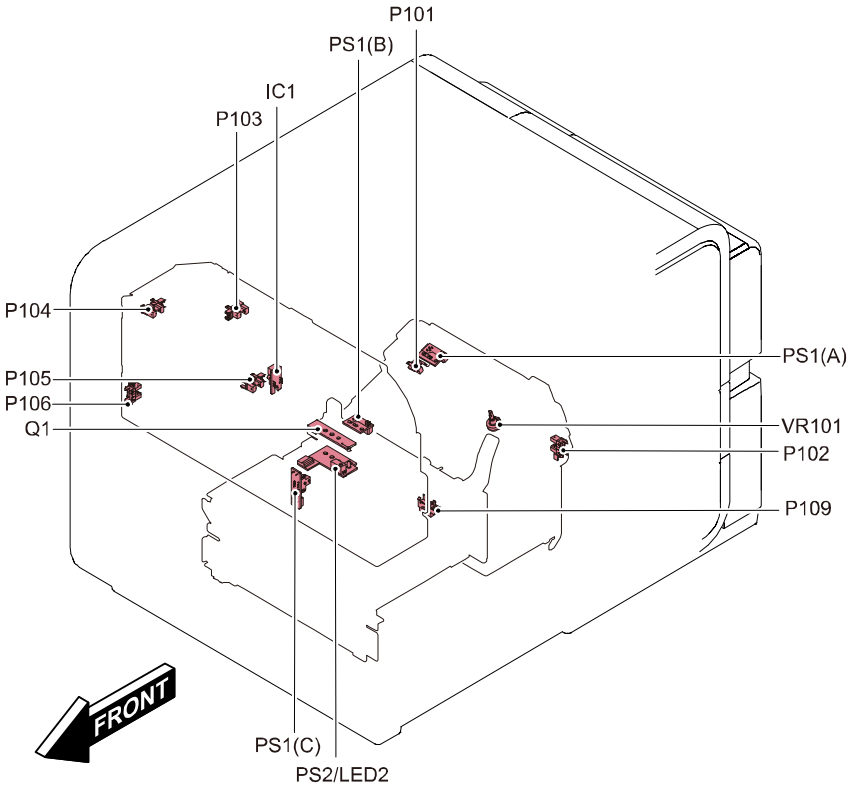

Symbol	Part Name	Main Unit	Reference
P101	Paper Side-registration Sensor	Paper Guide Unit	
PS1(B)	Paper Sensor	Transport Unit	
IC1	Pressure Sensor	Pump Unit	
P103	Valve Sensor 2	Pump Unit	
P104	Valve Sensor 1	Pump Unit	
P105	Printhead Home Position Sensor	Pump Unit	
P106	Purge Position Sensor	Print Module	
Q1	Upper TOF Sensor PCB	Transport Unit	
PS2/LED2	Lower TOF Sensor PCB	Transport Unit	
PS1(C)	Encoder Sensor	Transport Unit	
P109	Transport Sensor 1	Transport Unit	
P102	Paper Set Sensor	Paper Guide Unit	
VR101	Paper Width Sensor	Paper Guide Unit	
PS1(A)	Trailing Edge Sensor	Paper Guide Unit	

List of Sensors _2

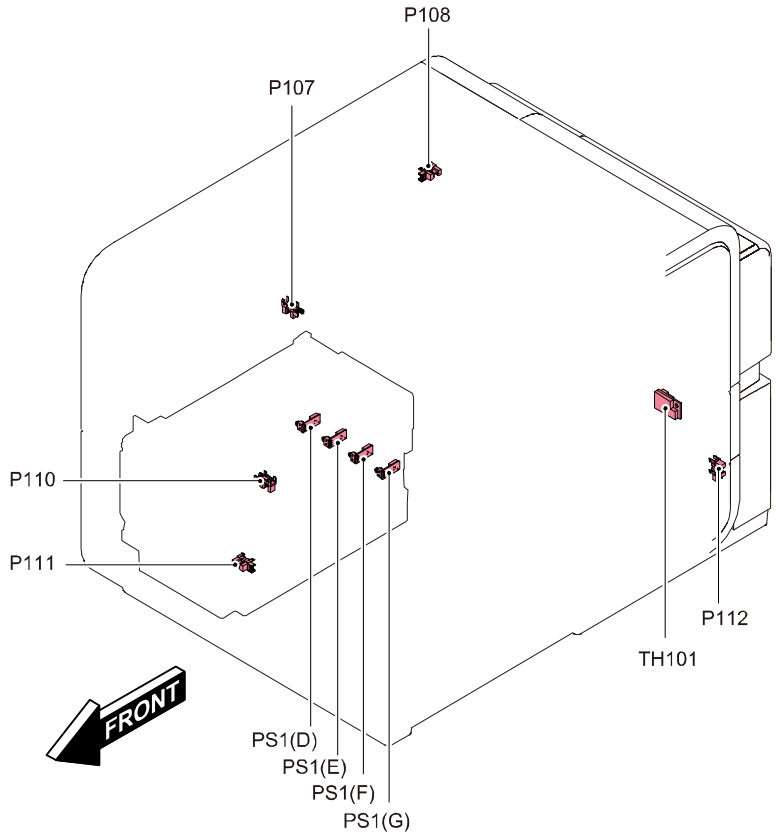

Symbol	Part Name	Main Unit	Reference
P108	Roll Cover Sensor	Upper Unit	
P107	Valve Sensor	Valve Unit	
P110	Transport Sensor 2	Upper Unit	
P111	Ink Tank Door Sensor	Lower Unit	
PS1(D)	Remaining Ink Sensor(Bk)	Ink Tank Holder Unit	
PS1(E)	Remaining Ink Sensor(C)	Ink Tank Holder Unit	
PS1(F)	Remaining Ink Sensor(M)	Ink Tank Holder Unit	
PS1(G)	Remaining Ink Sensor(Y)	Ink Tank Holder Unit	
P112	Maintenance Cartridge Door Sensor	Lower Unit	
TH101	Climate Sensor	Lower Unit	

List of Switches and Others

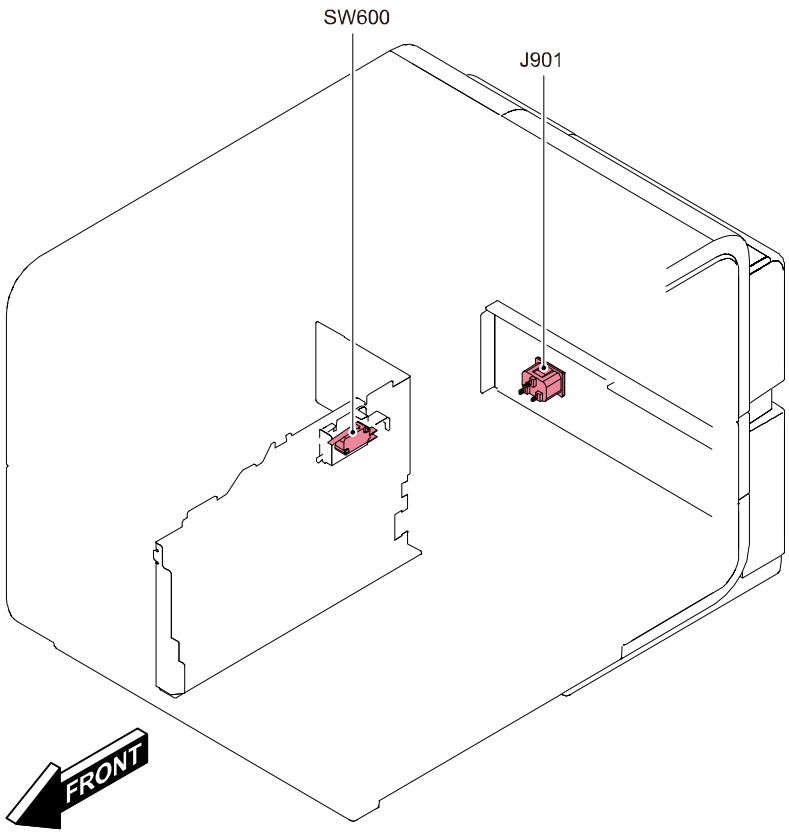

Symbol	Part Name	Main Unit	Reference
SW600	Upper Unit Safety Switch	Lower Unit	
J901	AC Inlet	Lower Unit	

List of PCBs

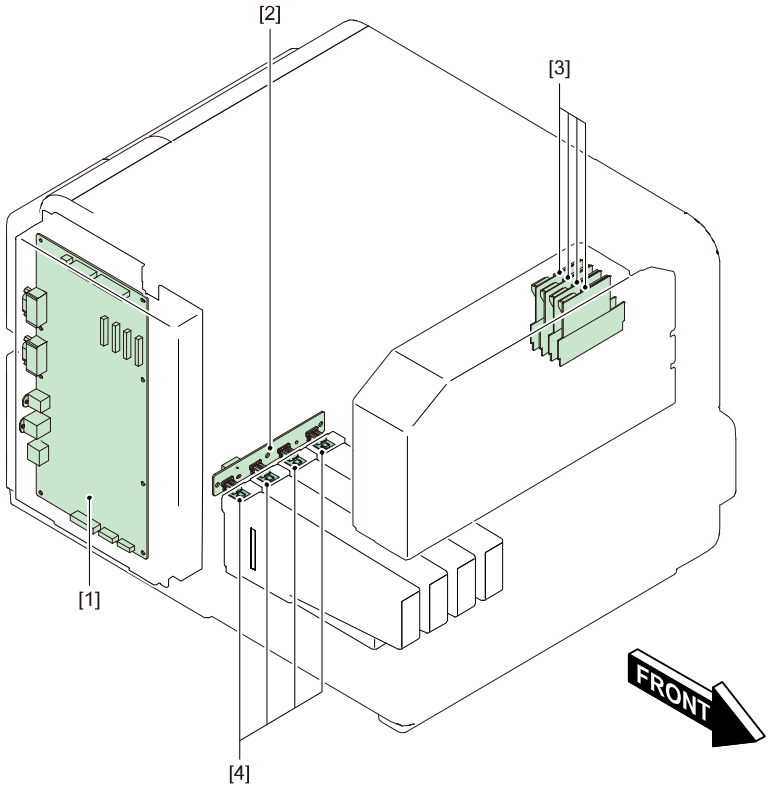

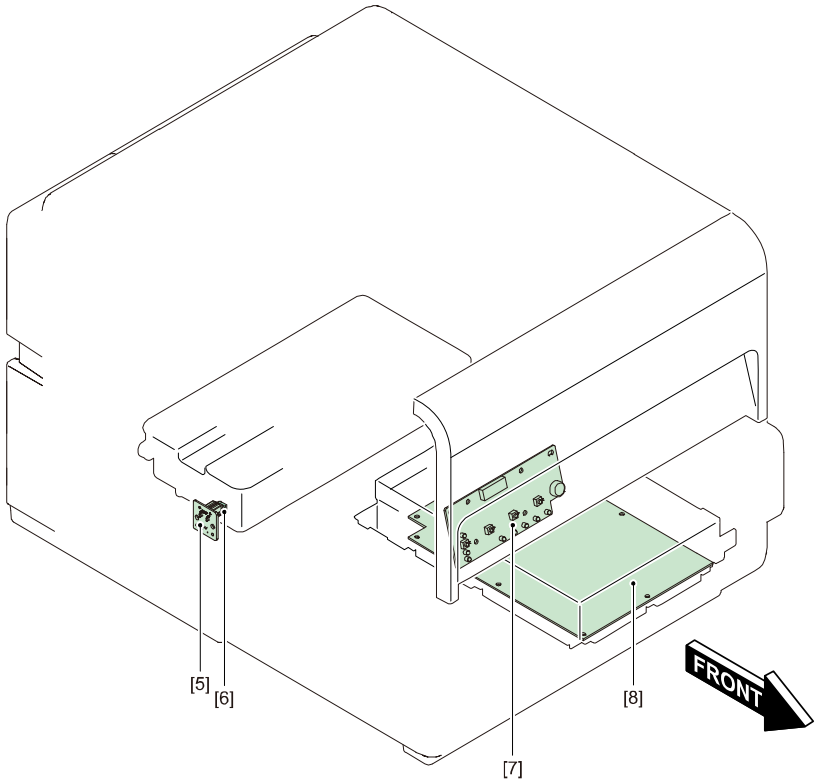

Symbol	Part Name	Main Unit	Reference
[1]	Printer Controller PCB	Lower Unit	
[2]	Ink Tank Relay PCB	Ink Tank Holder Unit	
[3]	Printhead Relay PCB	Print Module	
[4]	Ink Tank ROM PCB	Ink Tank	
[5]	Maintenance Cartridge Relay PCB	Lower Unit	
[6]	Maintenance Cartridge ROM	Maintenance Cartridge	
[7]	Operation Panel PCB	Operation Panel	
[8]	DC Power Supply PCB Unit	Power Supply Unit	

External Covers

Removing Upper Cover Unit

1) Open Roll Cover.

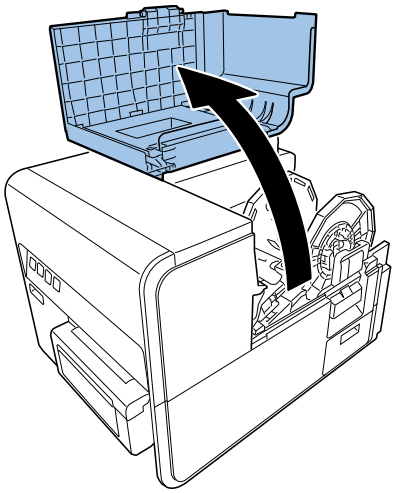

2) Remove Roll Holder.

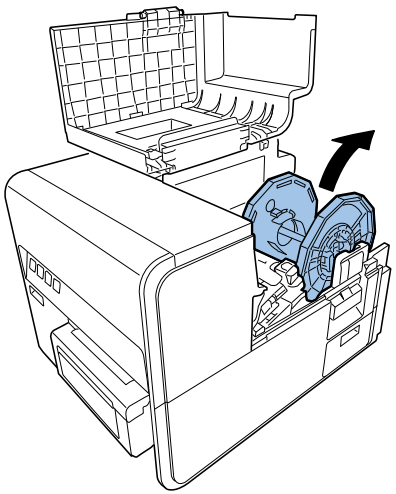

3) Press Upper Unit Open Lever and open Upper Unit.

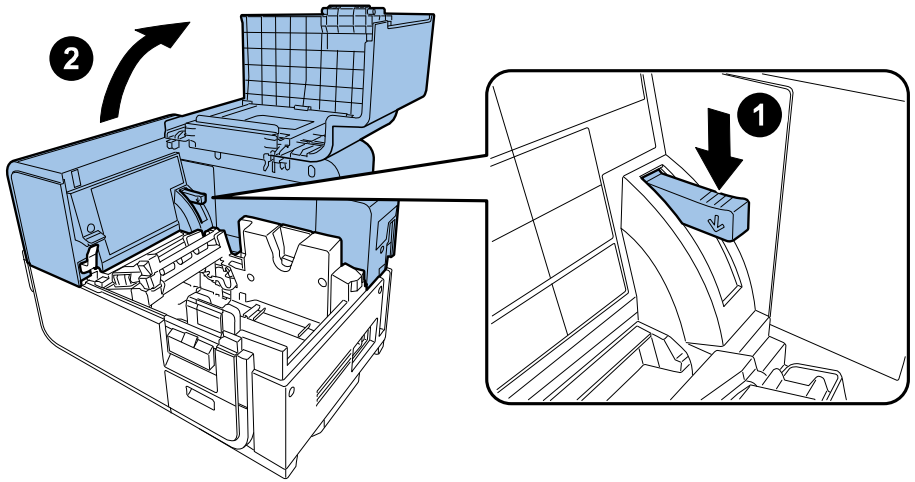

4) Remove Upper Cover Unit

- 4 screws

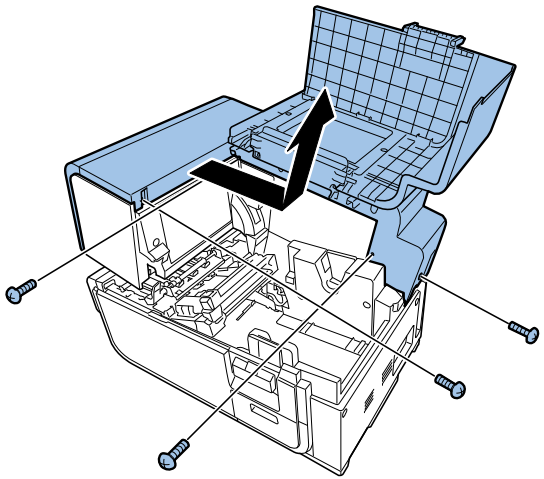

Removing Right Cover

1) Refer to ch. "Remove Upper Cover Unit" to remove the upper cover.

2) Remove Maintenance Cover.

- 2 screws

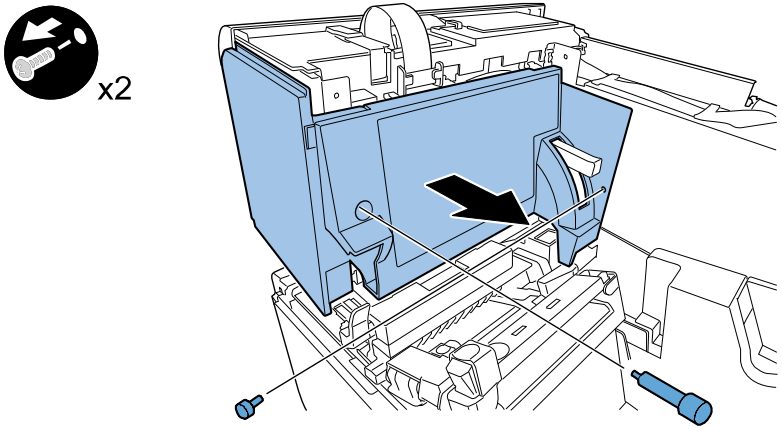

3) Remove screws securing Rear Cover.

- 1 screw

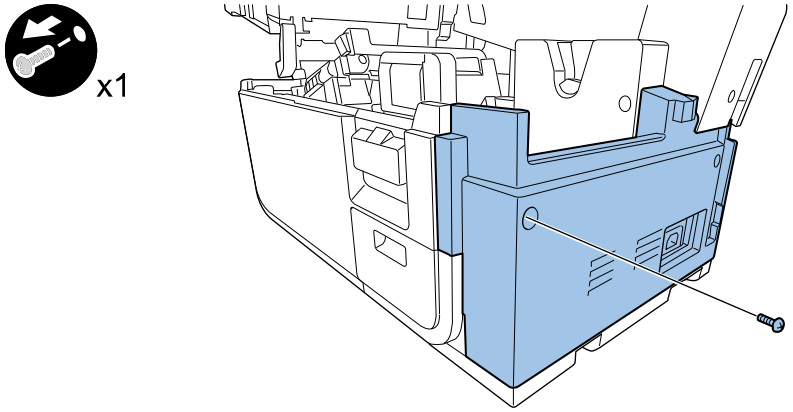

4) Slide Rear Cover and remove Right Cover.

- 4 screws

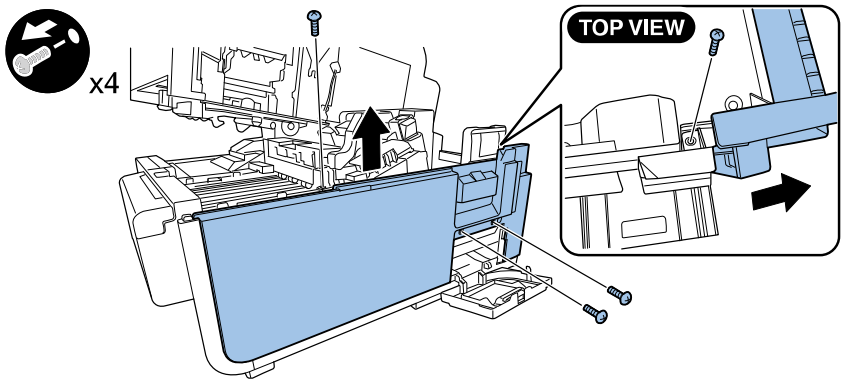

Removing Left Cover

1) Refer to ch. "Remove Upper Cover Unit" to remove the upper cover.

2) Remove Left Cover.

- 2 screws

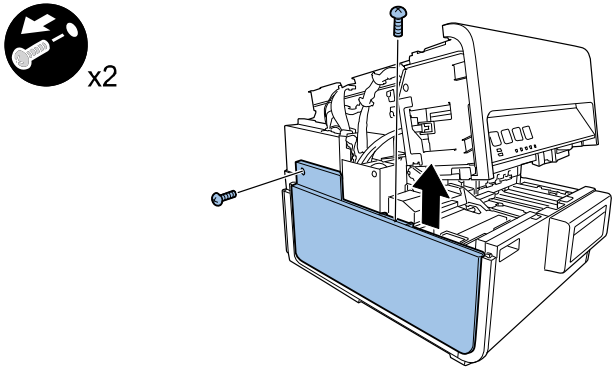

Removing Rear Cover

1) Refer to ch. "Remove Left Cover" to remove the left cover.

2) Remove Rear Cover.

- 2 screws

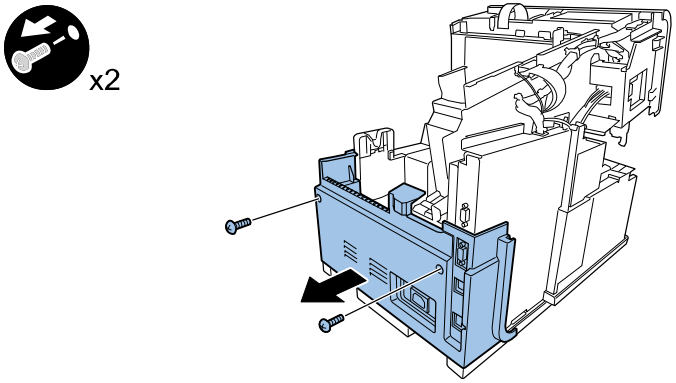

Removing Maintenance Cover

1) Open Roll Cover.

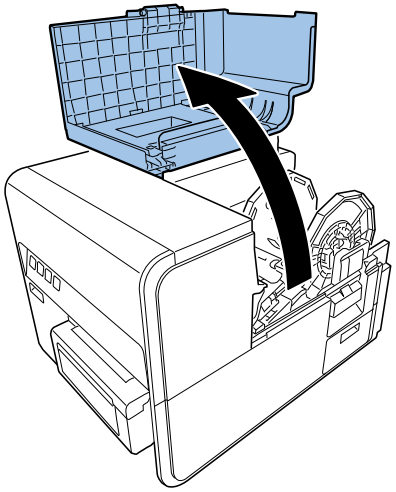

2) Open Upper Unit.

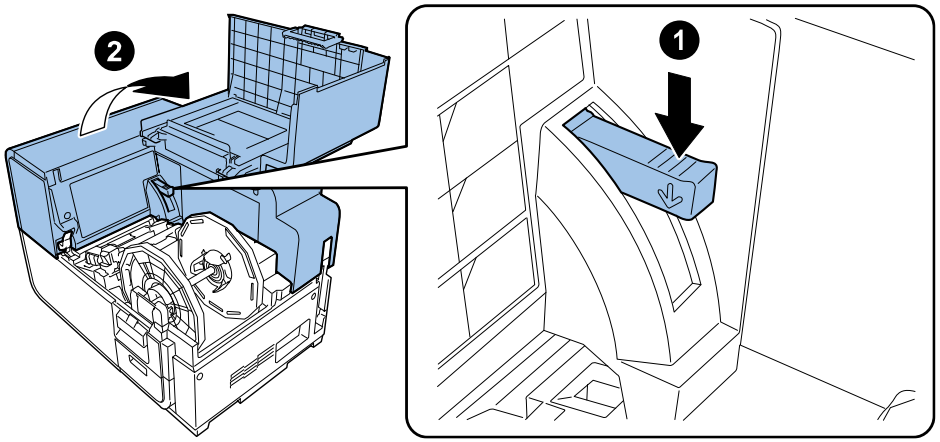

3) Remove Maintenance Cover.

- 2 screws

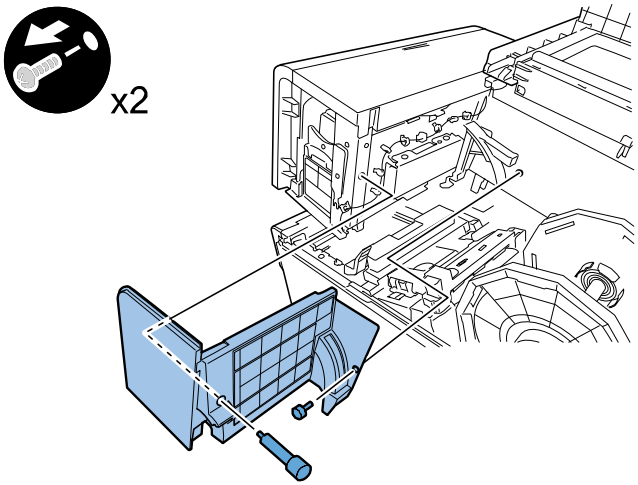

Main Units and Parts

Removing Roll Drive Unit

1) Open Roll Cover.

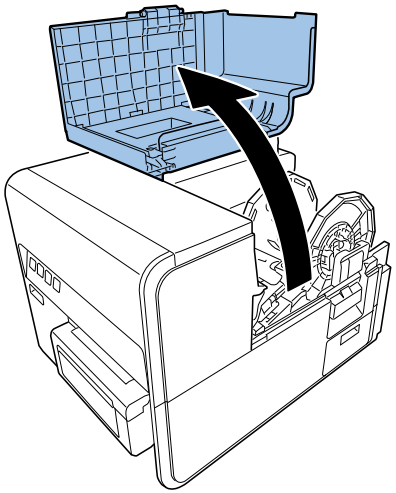

2) Remove Roll Holder.

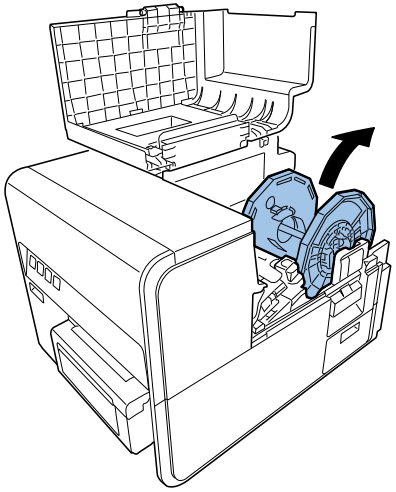

3) Remove Roll Tray.

- 3 screws

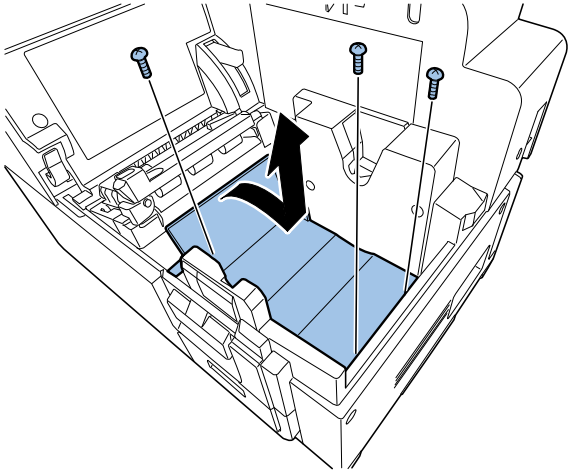

4) Remove Roll Drive Unit.

- 3 screws

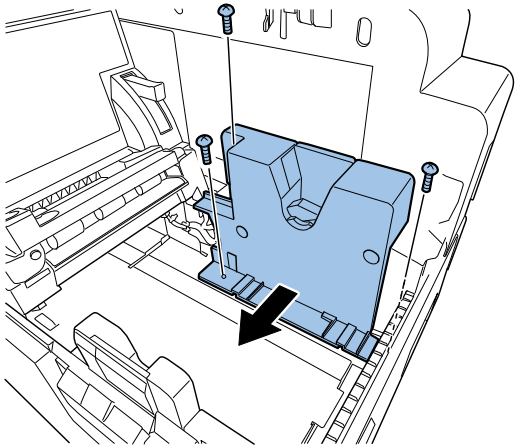

5) Remove Roll Drive Unit Connector.

- 1 connector

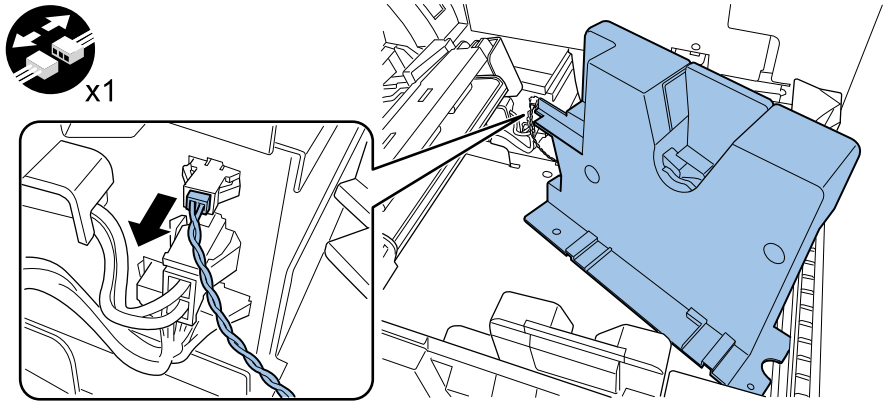

Removing Paper Guide Unit

1) Open Roll Cover.

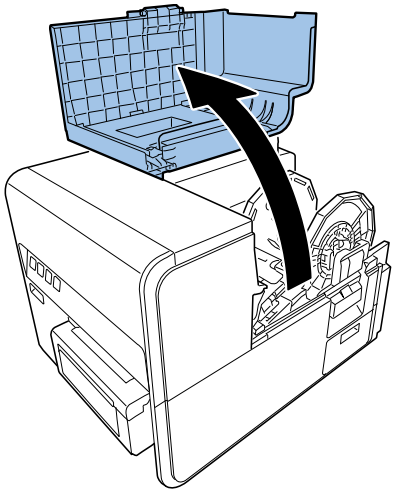

2) Remove Roll Holder.

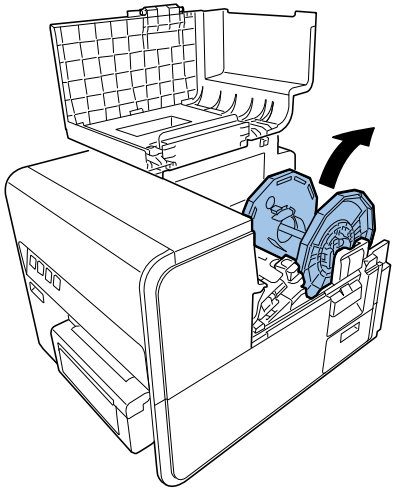

3) Press Upper Unit Open Lever and open Upper Unit.

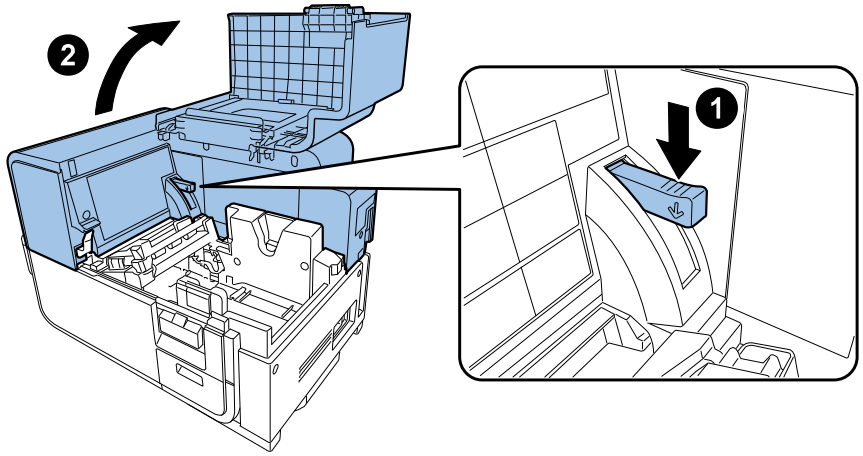

4) Remove Pinch Roller Cover.

- 2 screws

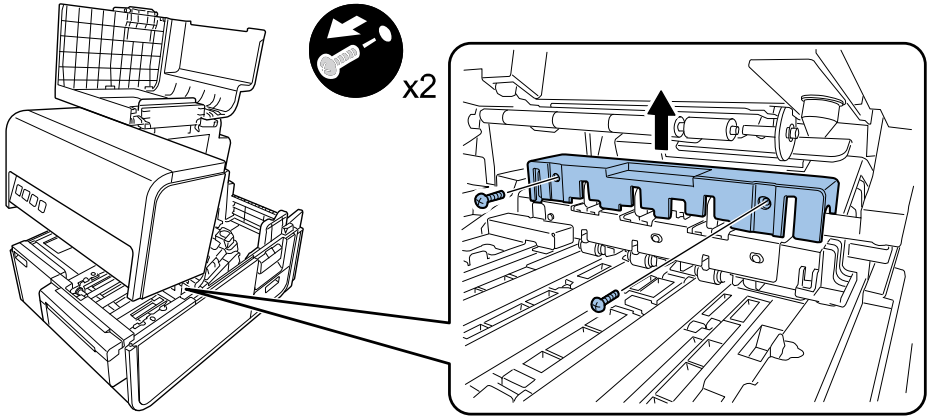

5) Remove Roll Tray.

- 2 screws

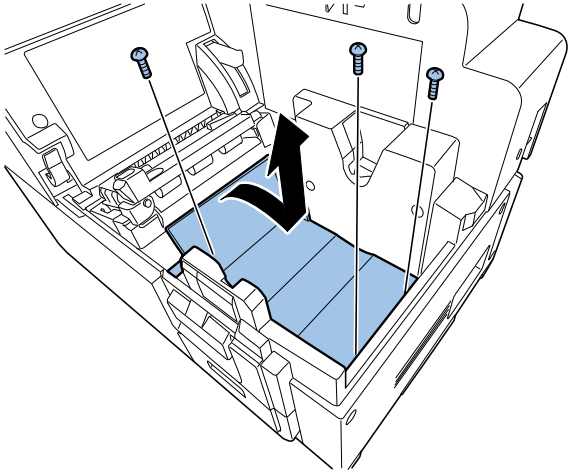

6) Remove Paper Guide Unit Connector.

- 1 connector

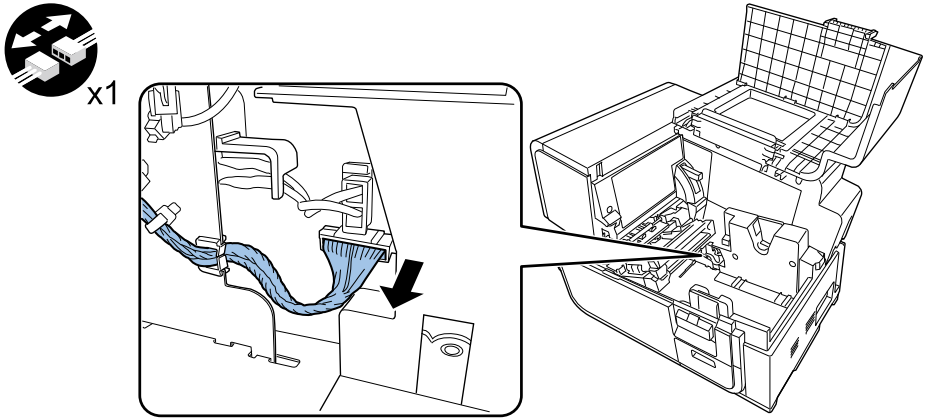

7) Remove Paper Guide Unit.

- 2 screws

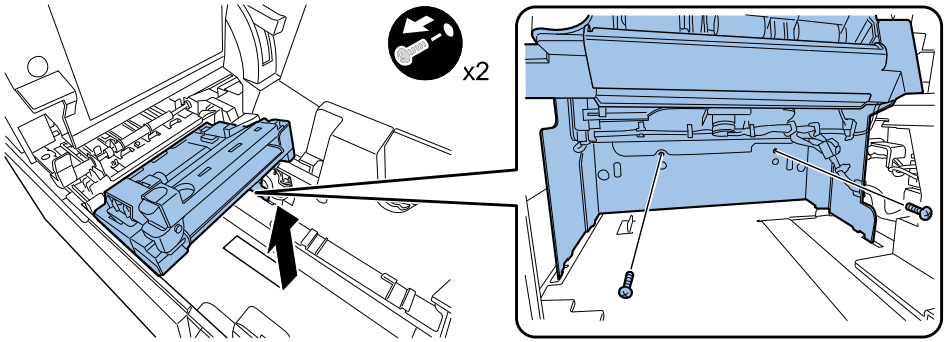

<Outline of Work after Paper Guide Unit Replacement>

Main operation after Paper Guide Unit replacement is shown below.

- Perform Paper Guide Position Adjustment

Removing Ink Tank Holder Unit

1) Drain ink in the pass from Print Module to Ink Tank Holder Unit. Using [Shipping the printer] of the service utility.

2) Remove Upper Cover Unit. (Refer to ch. "Removing Upper Cover Unit".)

3) Open Cutter Cover, slide Cutter to the center, and remove Cutter Cover.

- 2 screws

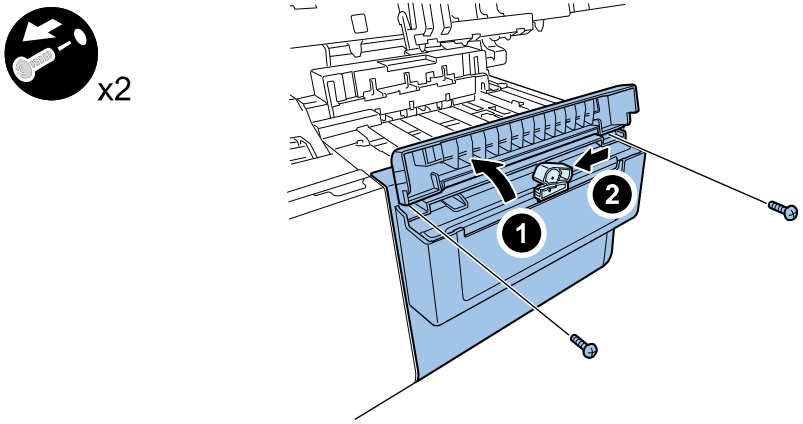

4) Remove Cutter Unit.

- 4 screws

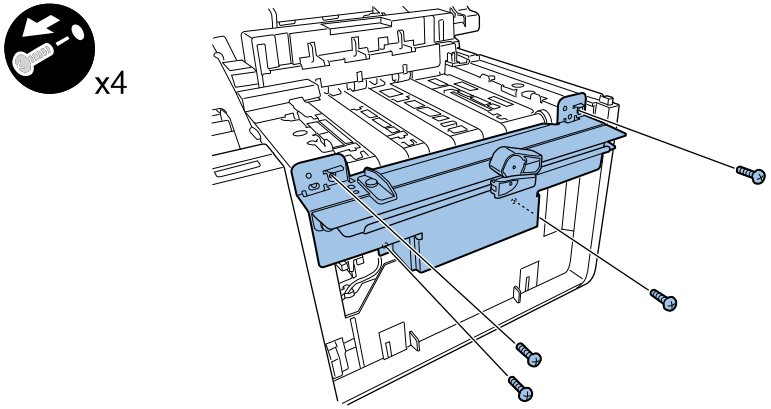

5) Open Ink Tank Door and remove Front Cover.

- 3 screws

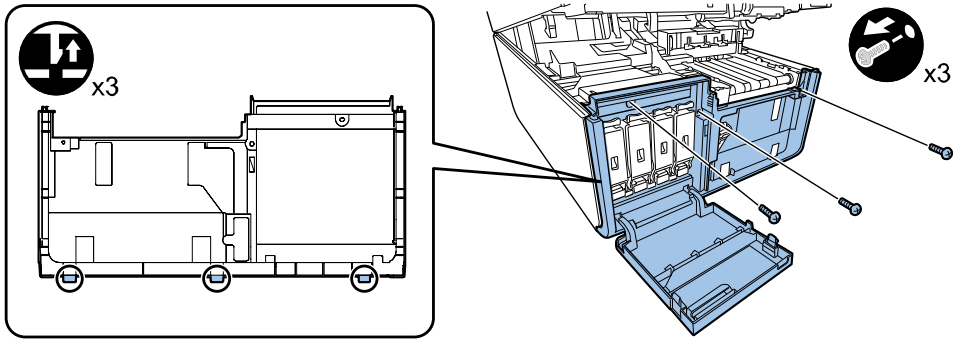

6) Remove Left Cover. (Refer to ch. "Removing Left Cover".)

7) Remove Rear Cover.(Refer to ch."Removing Rear Cover".)

8) Remove screws securing PCB Cover.

- 12 screws

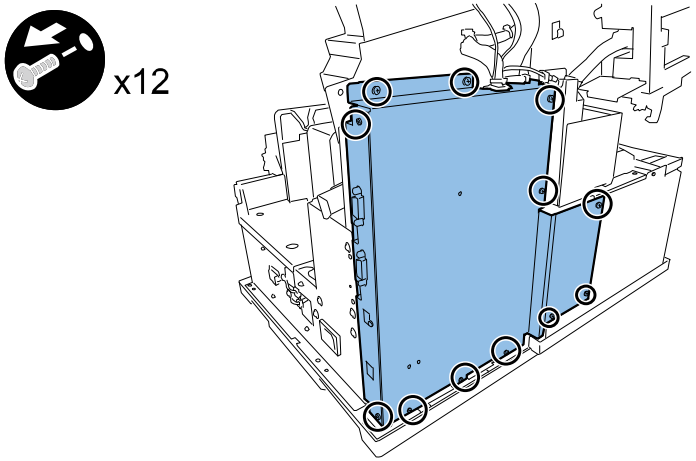

9) Remove Harness and PCB Cover.

- 2 clamps

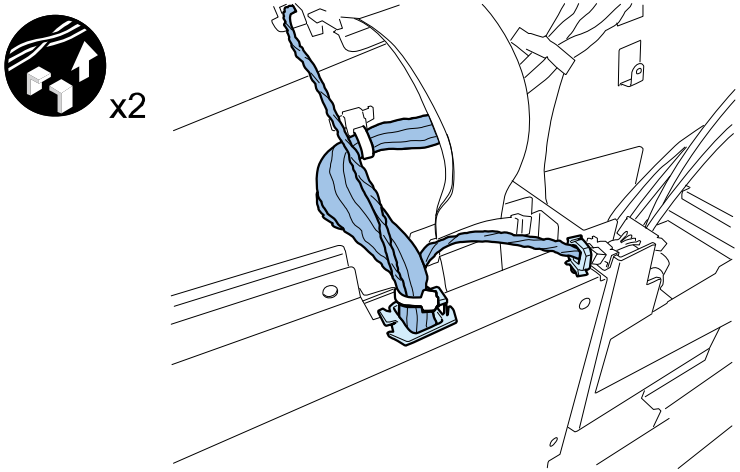

10) Remove Tank Holder Support Plate.

- 2 screws

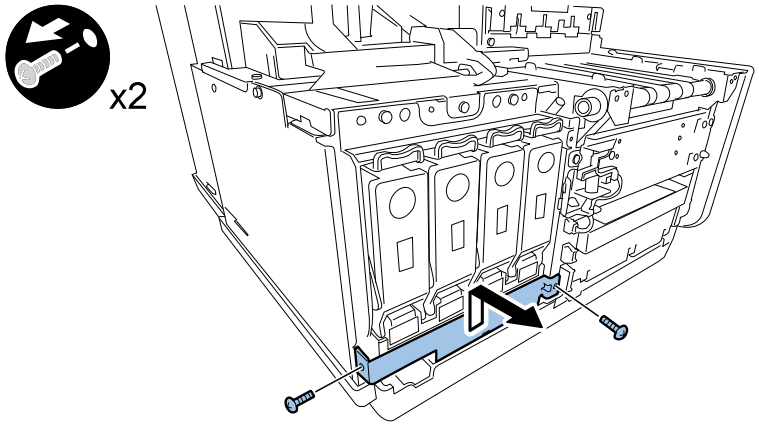

11) Remove screws securing Ink Tank Holder Unit.

- 2 screws

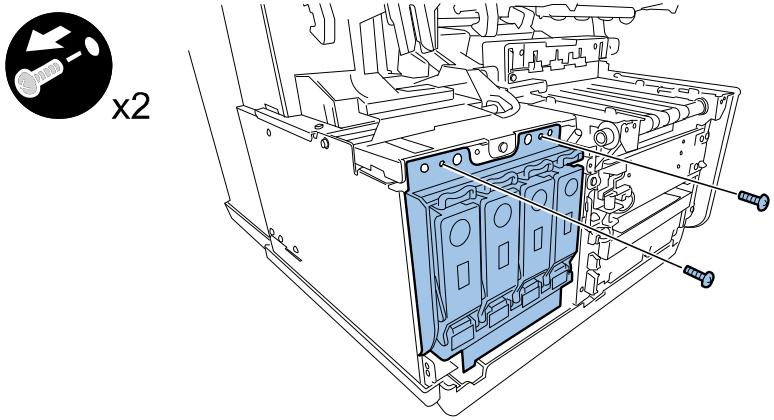

12) Remove Harness.

- 1 connector
- 3 clamps

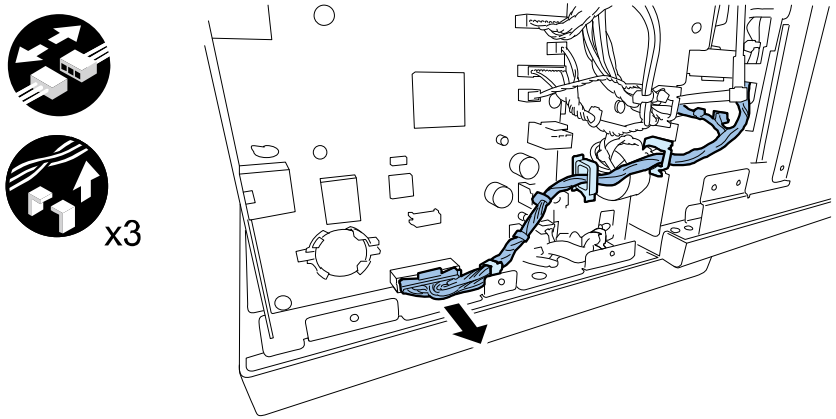

CAUTION:

Set the harness as following figure.

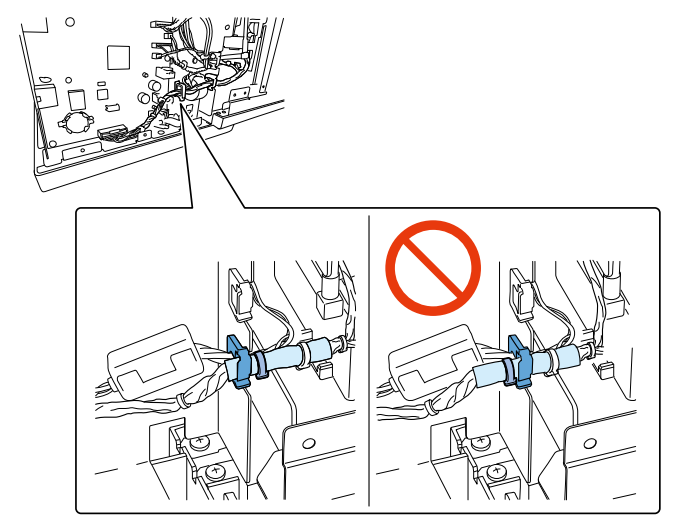

13) Remove Relay Connector.

- 1 connector

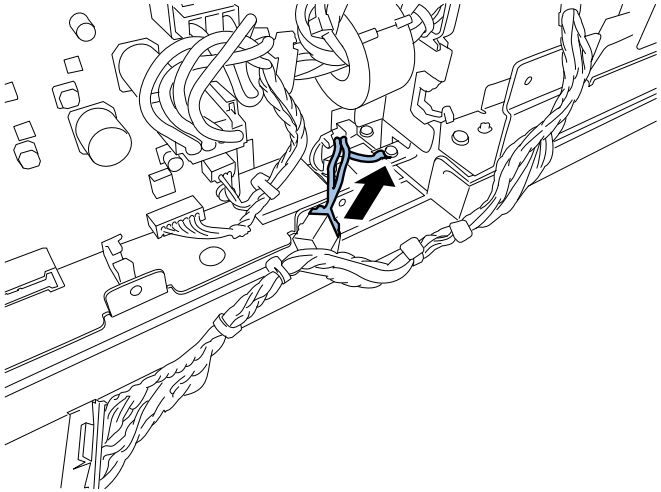

14) Move Ink Tank Holder Unit to the front side.

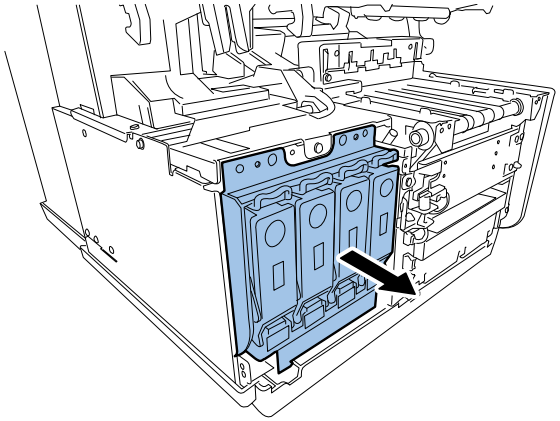

15) Remove Ink Tube Joint (Ink Tank side).

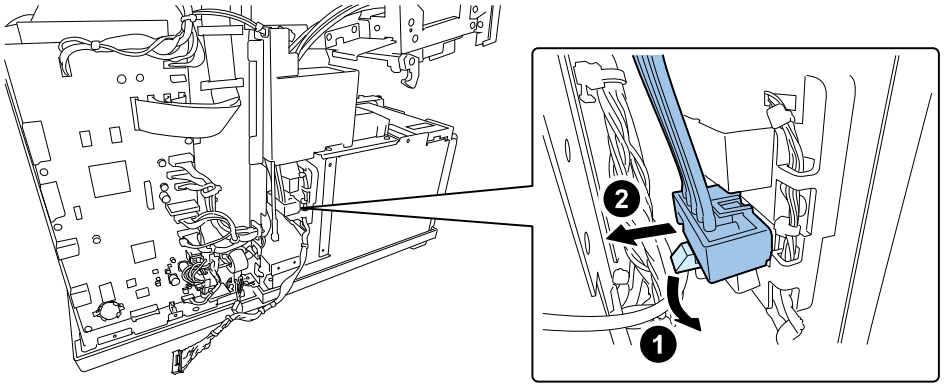

CAUTION:

Do not pull out or damage Ink Tube when removing Ink Tube Joint.

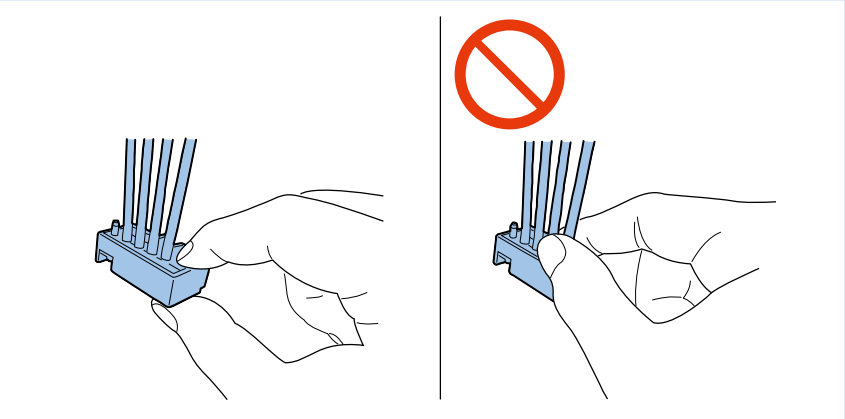

16) Free Waste Ink Tube from clamp.

- 1 clamp

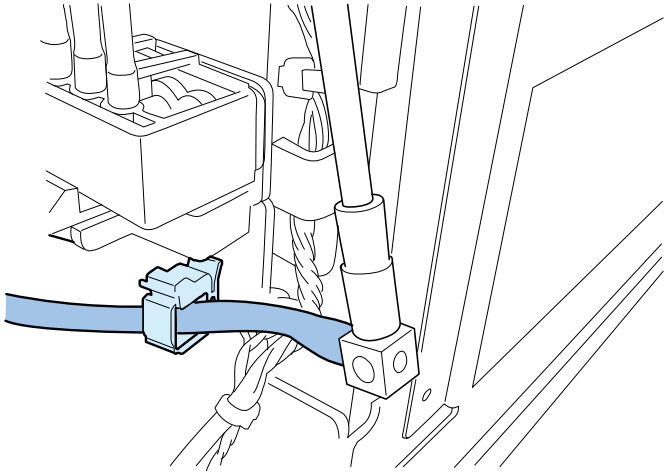

⚠ CAUTION:

When installing Ink Tank Holder Unit, pass it through the clamp, do not pass the harness.

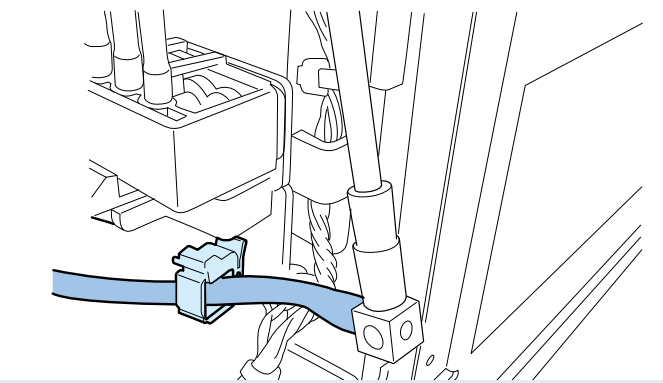

17) Remove Ink Tank Holder Unit.

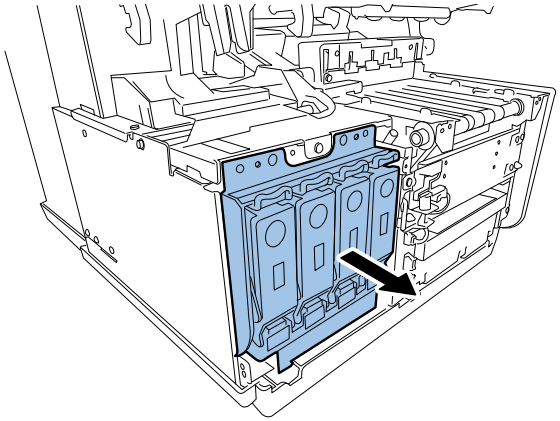

Removing Valve Unit

1) Drain ink in the pass from Print Module to Ink Tank Holder Unit. Using [Shipping the printer] of the service utility.
2) Remove Upper Cover Unit. (Refer to ch. "Removing Upper Cover Unit".)
3) Open Cutter Cover, slide Cutter to center, and remove CutterCover.
   - 2 screws

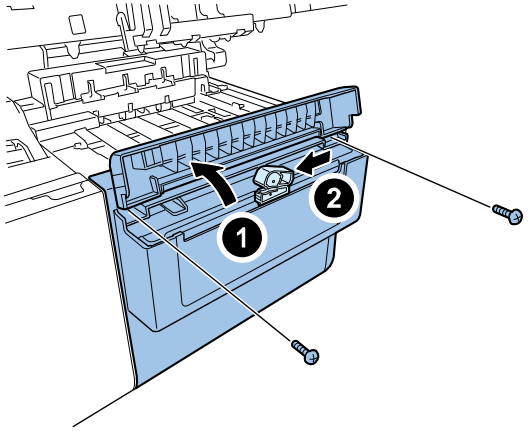

4) Remove Cutter Unit
   - 4 screws

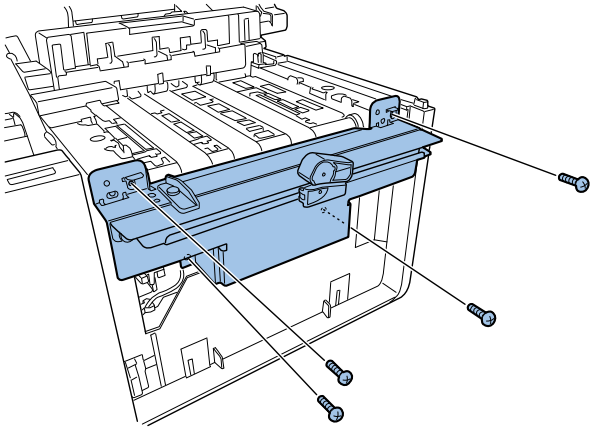

5) Open Ink Tank Door and remove Front Cover.
   - 3 screws

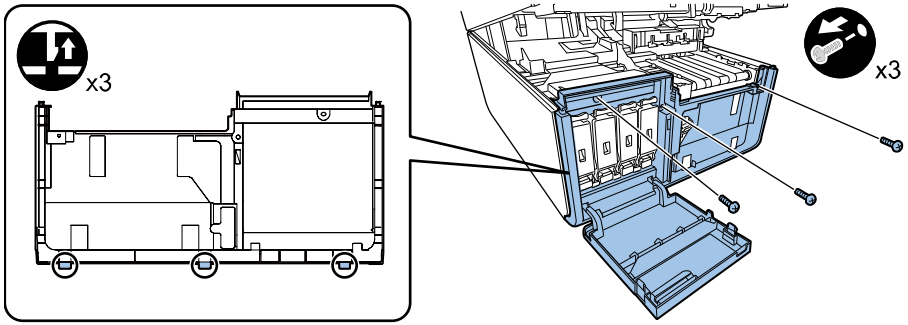

6) Remove Left Cover.("Removing Left Cover"(page 4-12).)
7) Remove Rear Cover. ("Removing Rear Cover"(page 4-13).)
8) Remove screws securing PCB Cover.
   - 12 screws

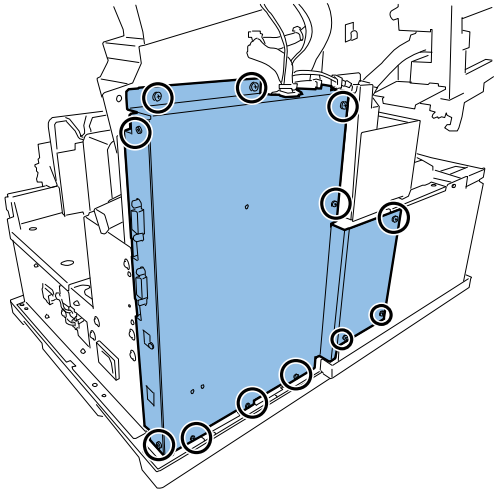

9) Remove Harness and PCB Cover.

- 2 clamps

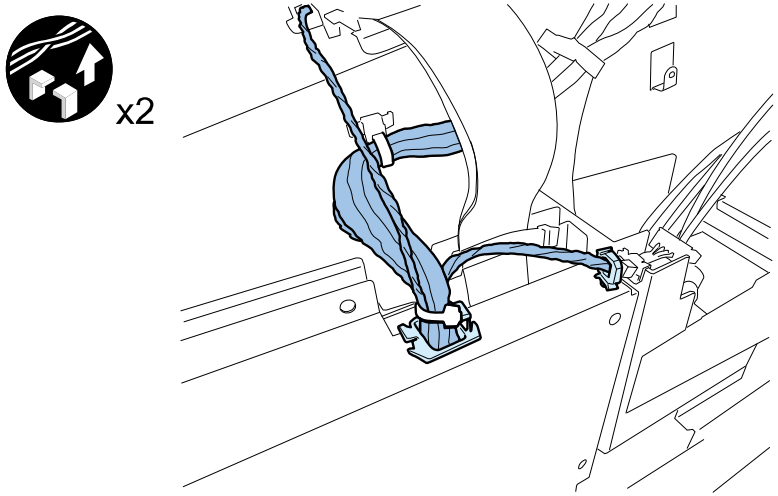

10) Remove Tank Holder Support Plate.

- 2 screws

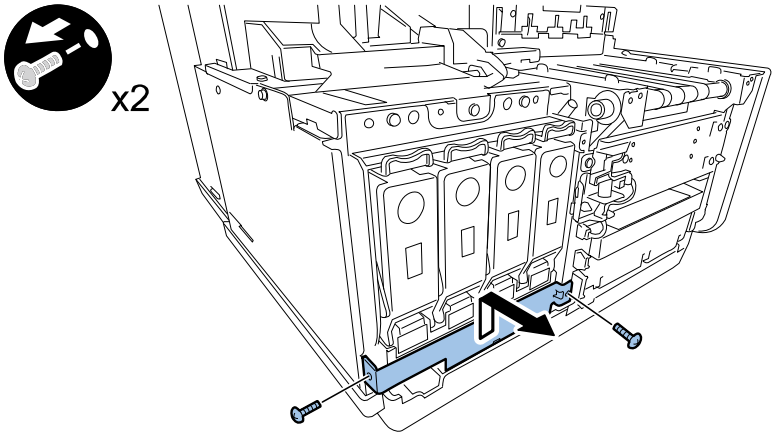

11) Remove screws securing Ink Tank Holder Unit.

- 2 screws

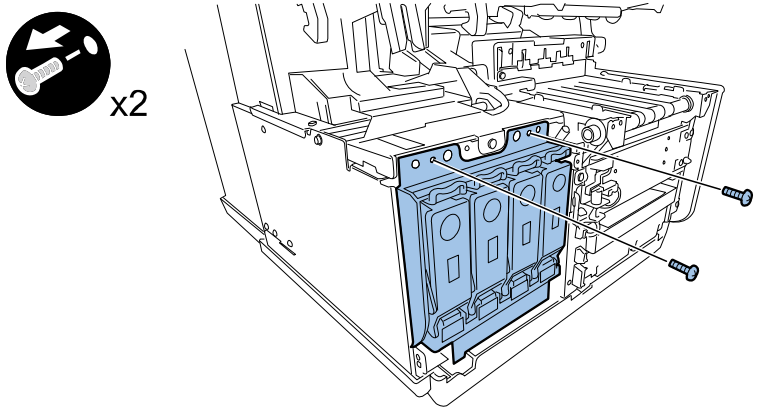

12) Remove Tube Cover.

- 1 screw

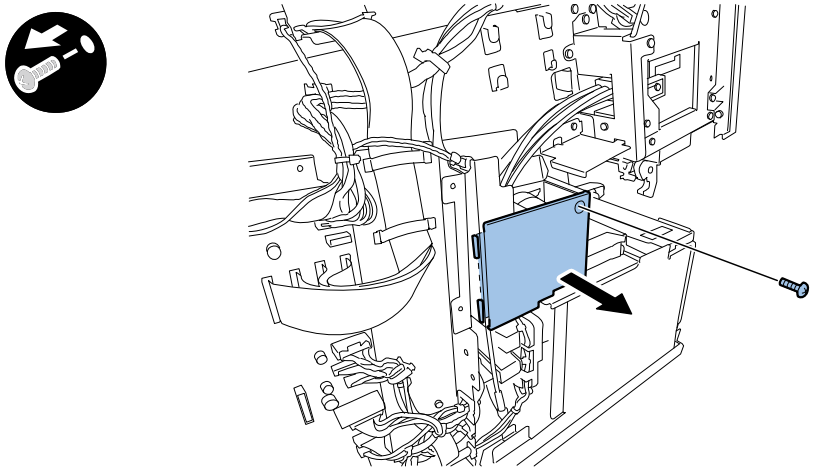

13) Remove connectors.

- 2 connectors

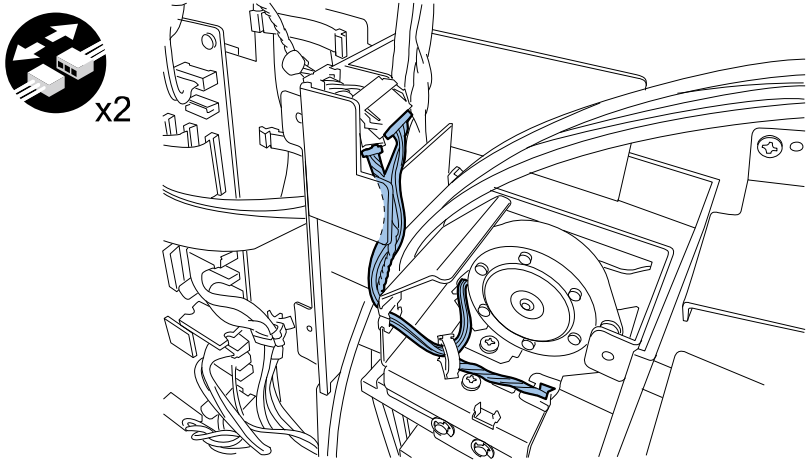

14) Remove screws securing Valve Unit.

- 2 screws

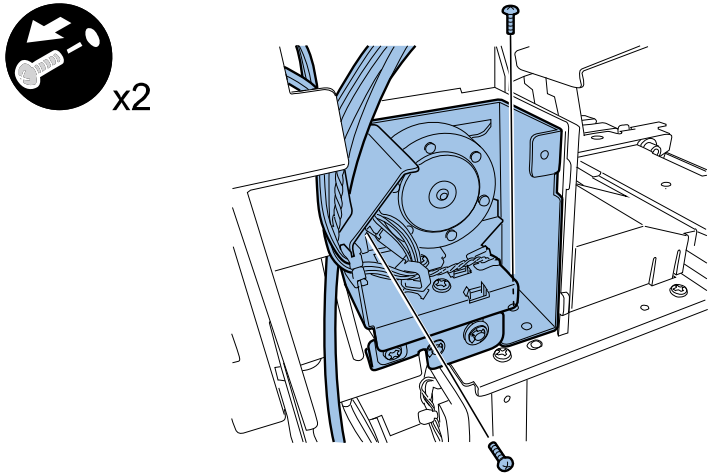

15) Remove Corner Plate.

- 4 screws

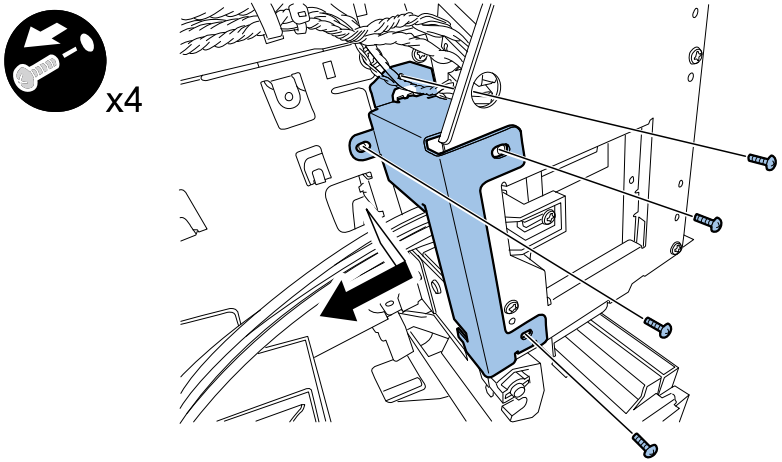

16) Remove Ink Tube Joint (Print Module side).

- 1 screw

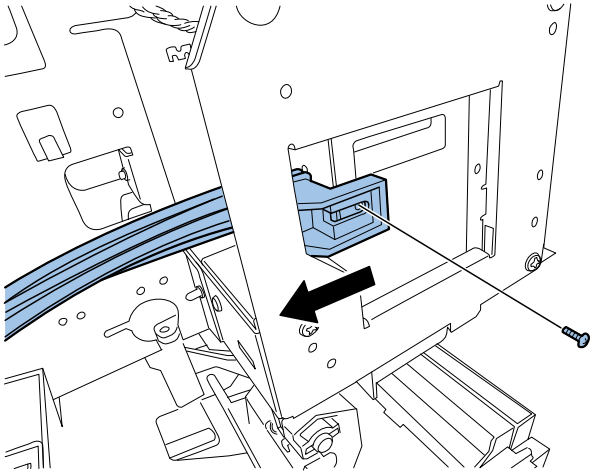

⚠ CAUTION:

Do not pull out or damage Ink Tube when removing Ink Tube Joint.

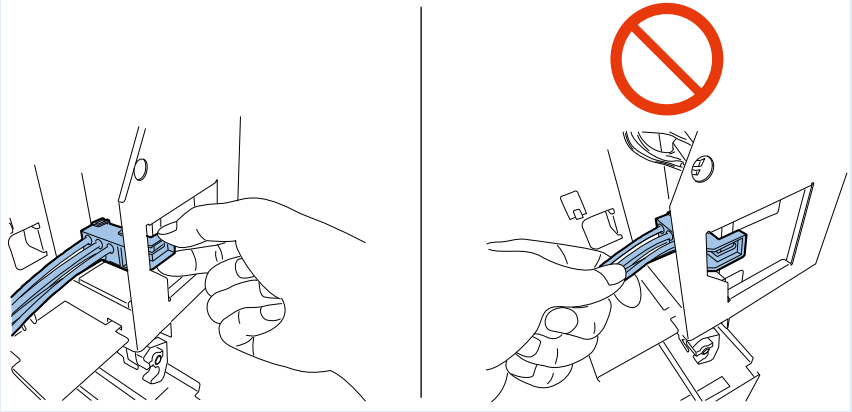

17) Move Ink Tank Holder Unit to the front side.

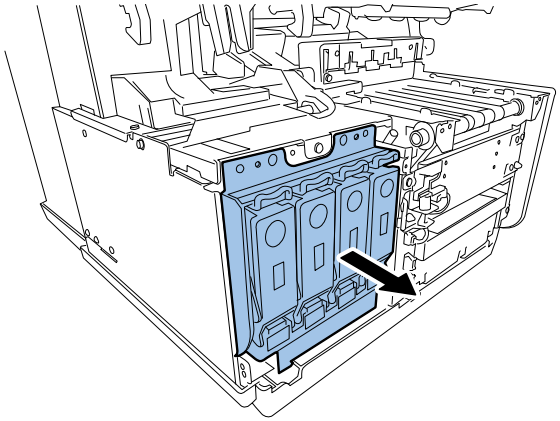

18) Remove Ink Tube Joint (Ink Tank side).

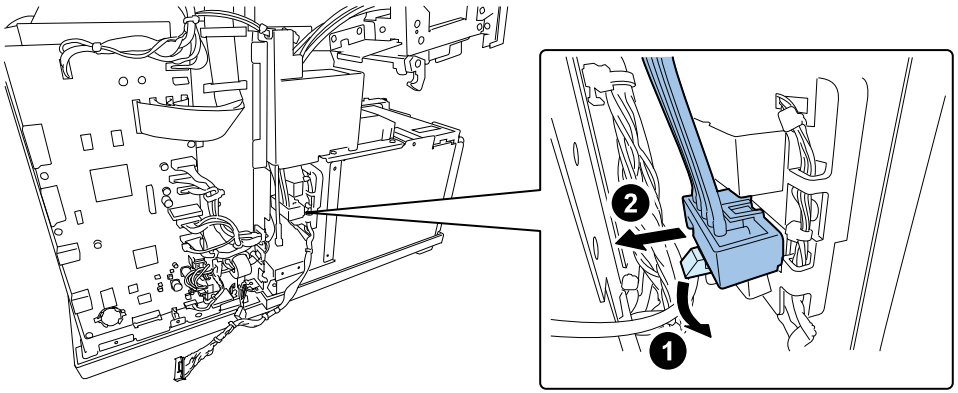

⚠ CAUTION:

Do not pull out or damage Ink Tube when removing Ink Tube Joint.

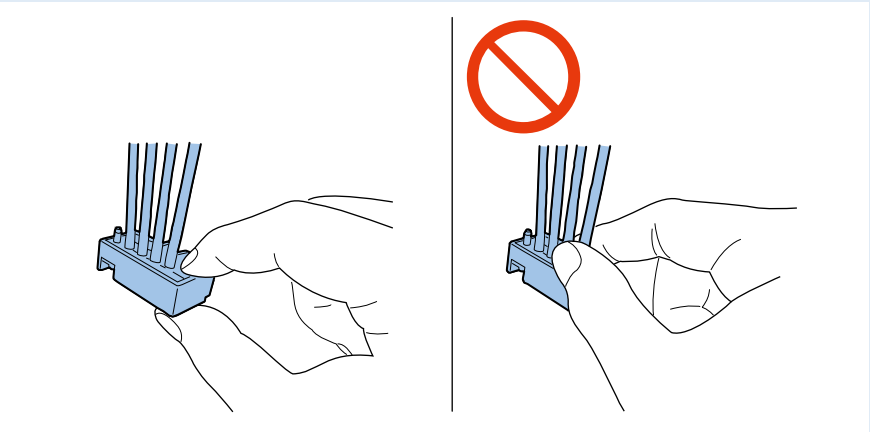

19) Disconnect Waste Ink Tube.

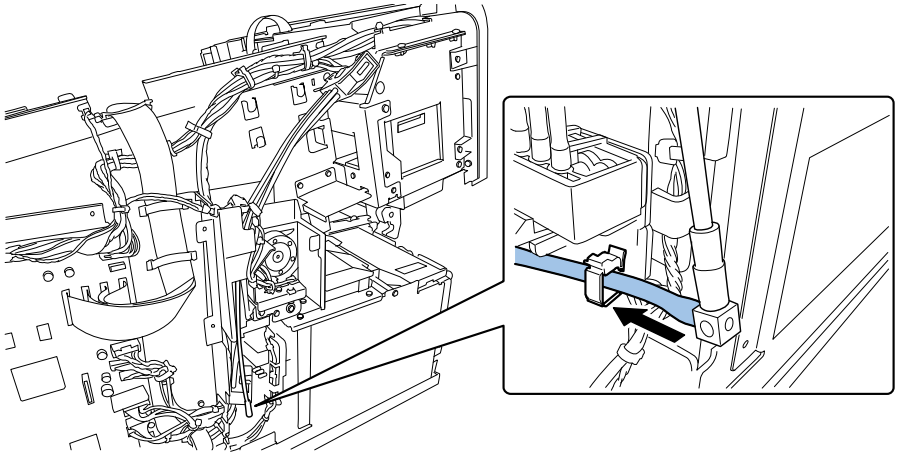

⚠ CAUTION:

- When disconnecting Waste Ink Tube, ink remaining in it can flow out. Place paper towel or the like under Waste Ink Tube before disconnecting Waste Ink Tube.
- When reconnecting Waste Ink Tube, pass it through the clamp, do not pass the harness.

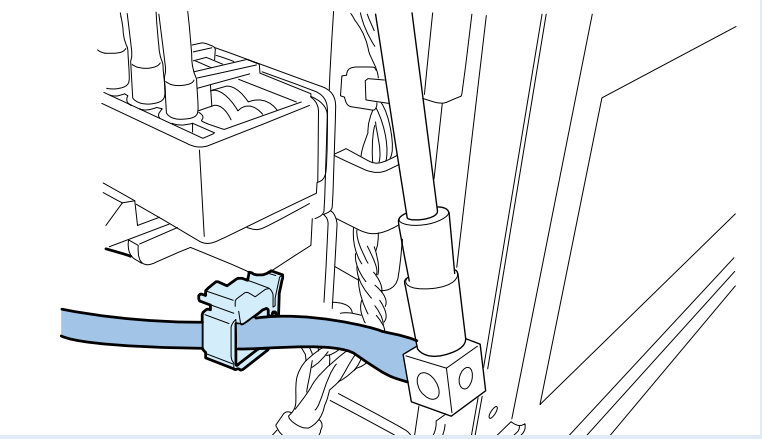

20) Remove Valve Unit.

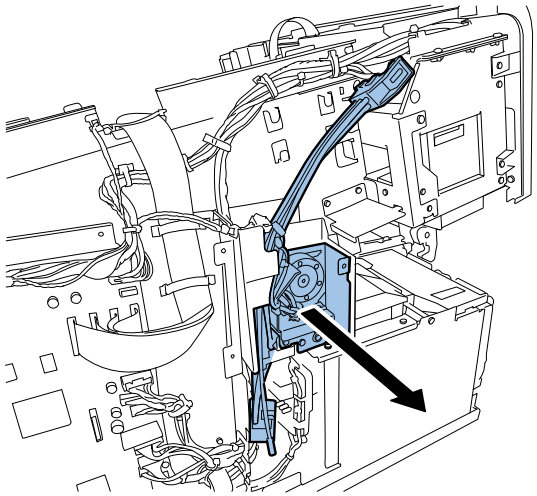

Removing Print Module

1) Execute [Consumable Parts Replacement > Head] of Service Utility to drain ink from the ink passage between Print Module and Ink Tank Holder Unit.
2) Remove Printhead Unit. (Refer to ch. "Replacing Printhead".)
3) Remove Upper Cover Unit. (Refer to ch. "Removing Upper Cover Unit".)
4) Remove Stopper.
   - 2 screws

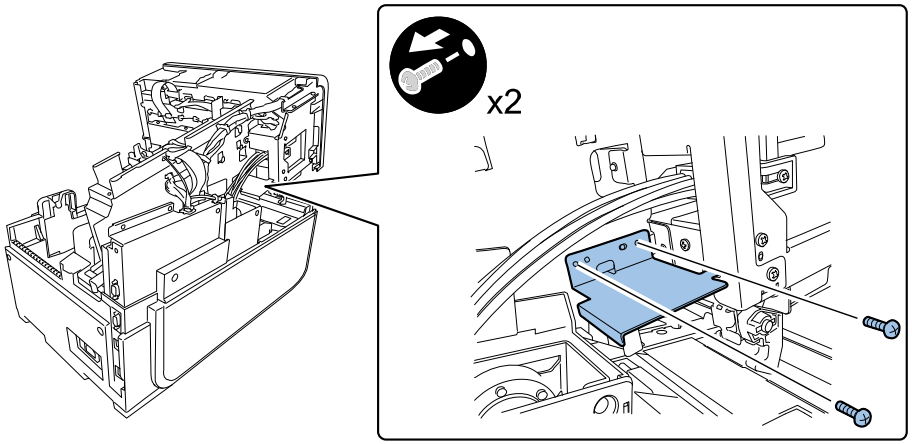

5) Install Stopper.

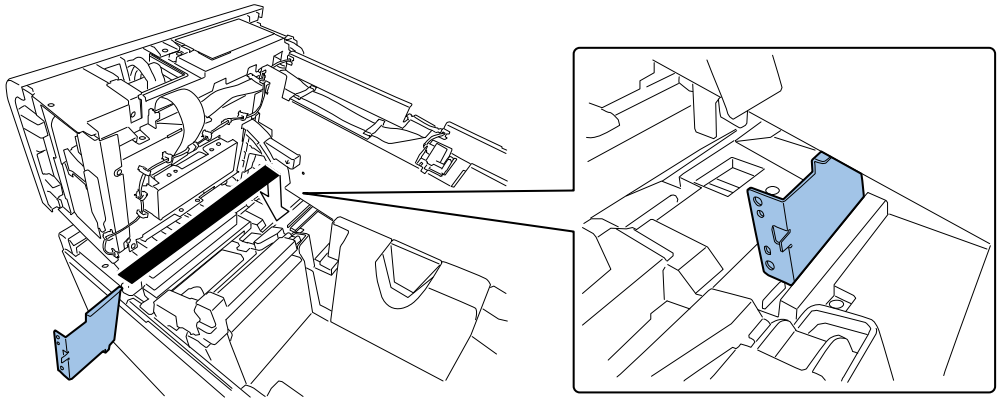

> ⚠ CAUTION:
> Install Stopper before removing Print Module or Upper Unit burst open.

6) Remove Operation Panel.

- 4 screws
- 2 claws
- 1 connector

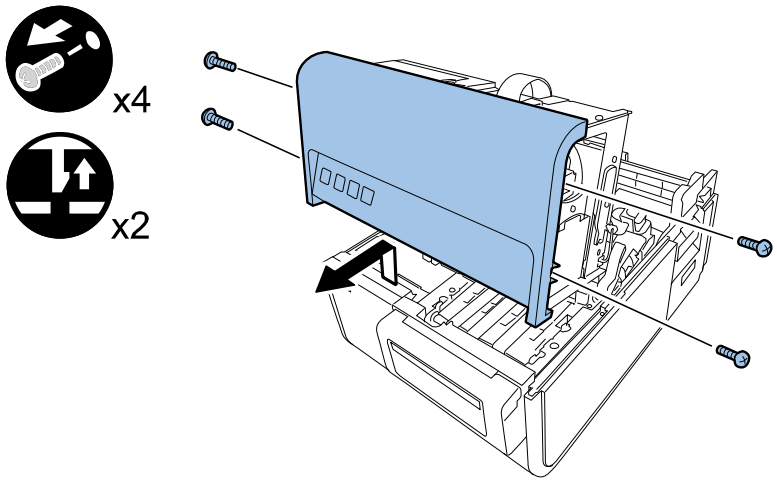

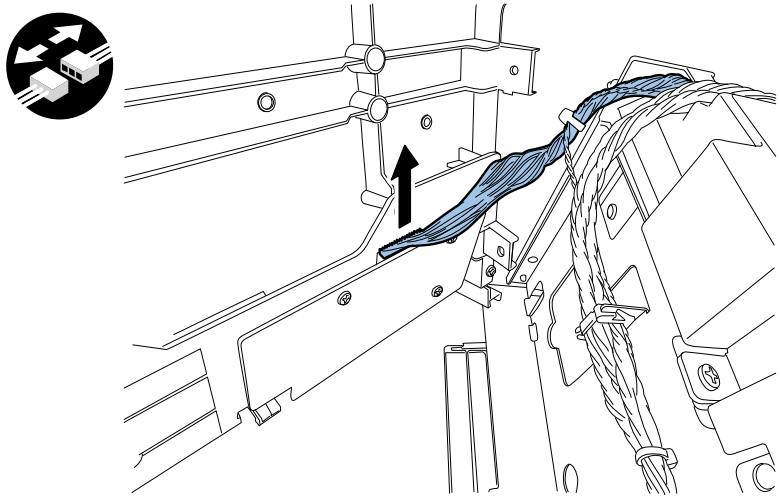

7) Remove Printhead and Sensor Connectors.

- 5 connectors

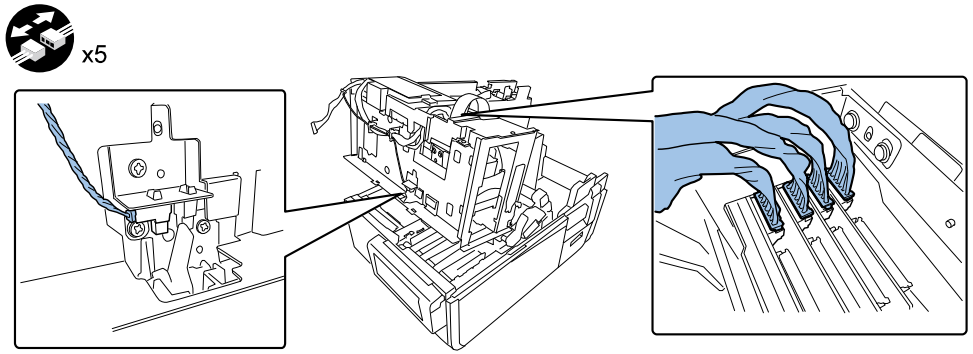

8) Remove harness.

- 3 clamps

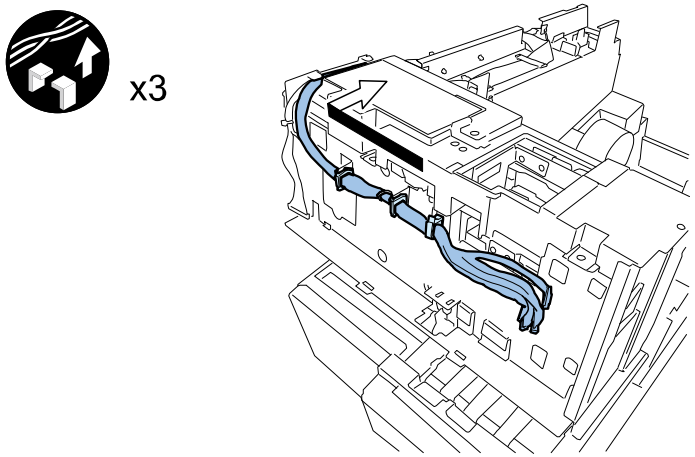

9) Remove Flexible Cable Connectors.

- 4 connectors

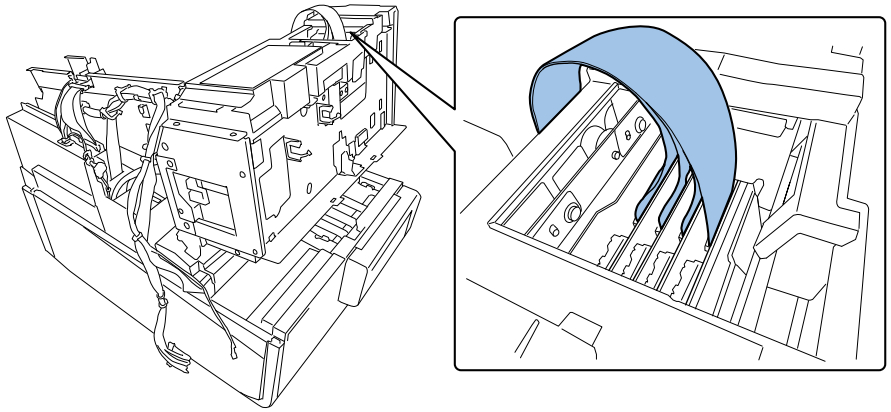

CAUTION:

- Do not touch the terminal pins of Flexible Cable. A failure can result.
- Be careful falling out or damage parts of the flexible cable connector.

10) Remove Grounding Plate and pull out Spring.

- 1 screw

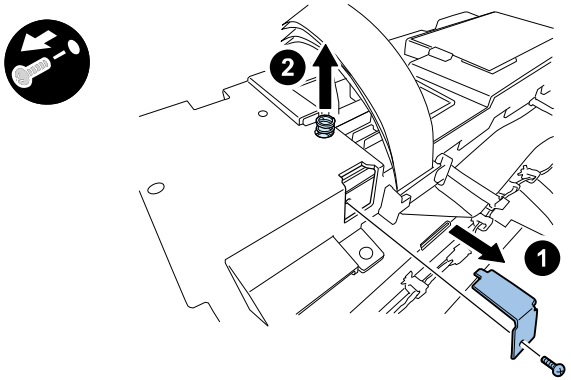

Note:
Be careful for dropping or loosing Spring.

11) Remove screws securing Print Module Cover.

- 7 screws

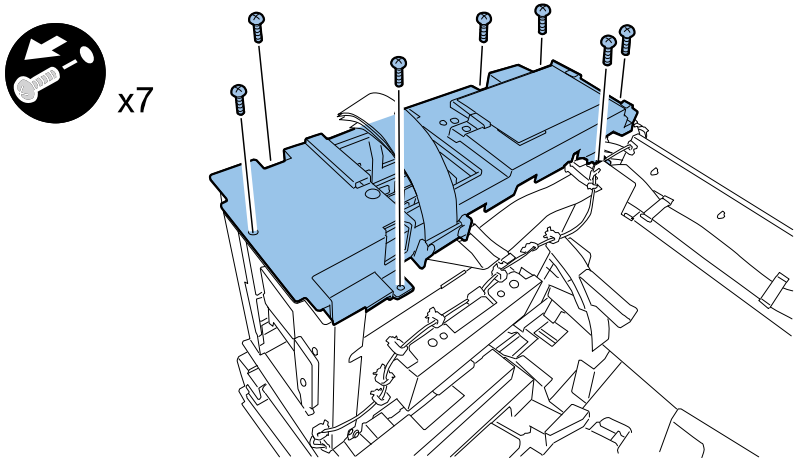

12) Remove Core of Flexible Cable.

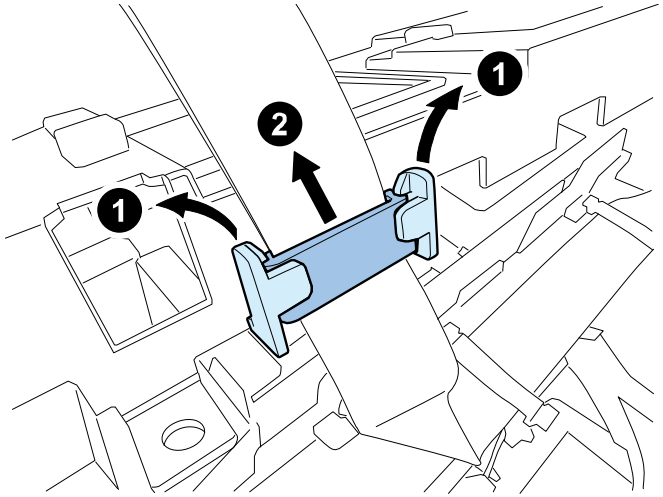

13) Remove Sensor Plate.

- 1 screw

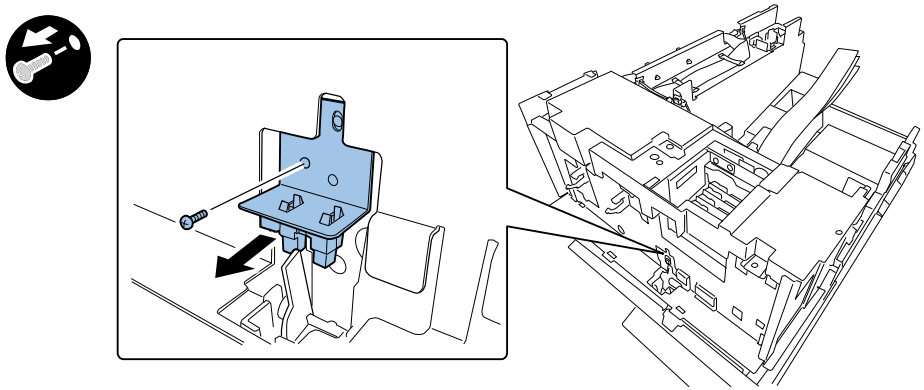

14) Remove Spur Unit.

- 2 screws

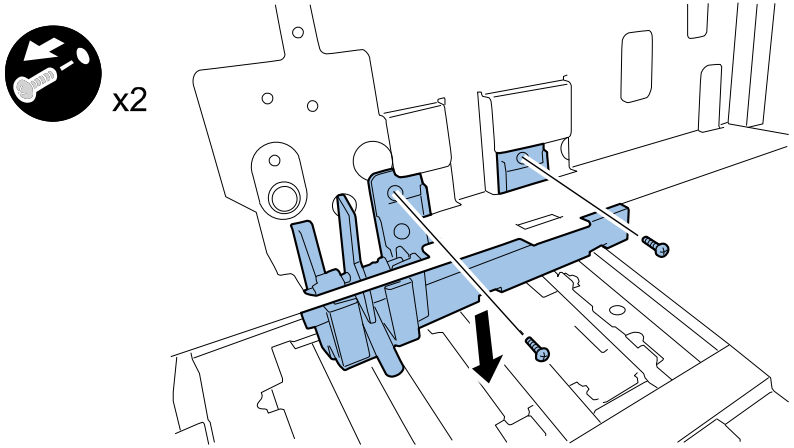

15) Remove Harness.

- 1 clamp

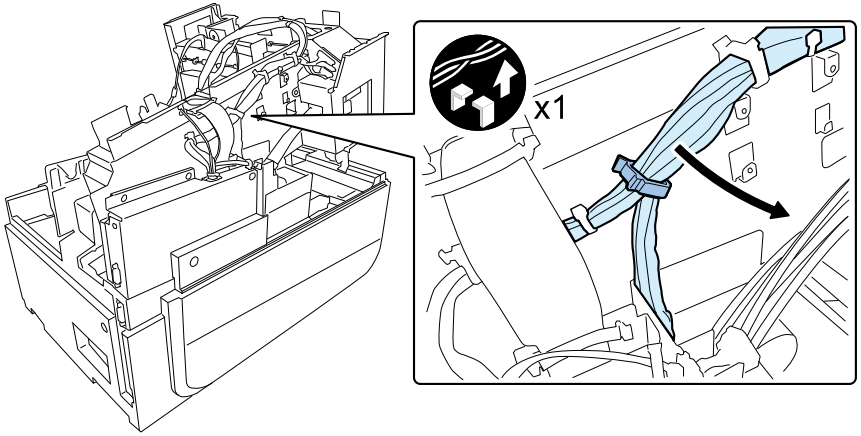

16) Remove Corner Plate.

- 4 screws

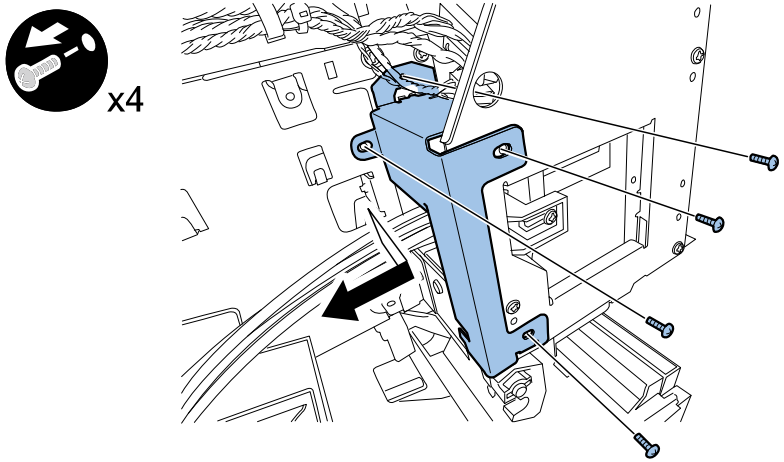

17) Remove Ink Tube Joint (Print Module side).

- 1 screw

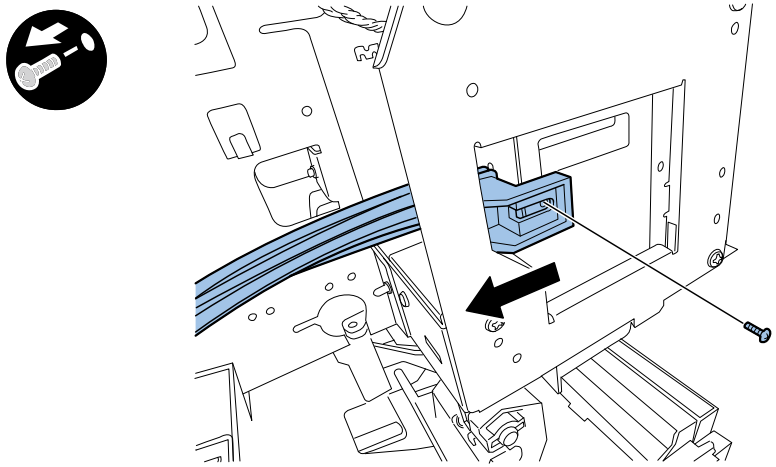

⚠ CAUTION:

Do not pull out or damage Ink Tube when removing Ink Tube Joint.

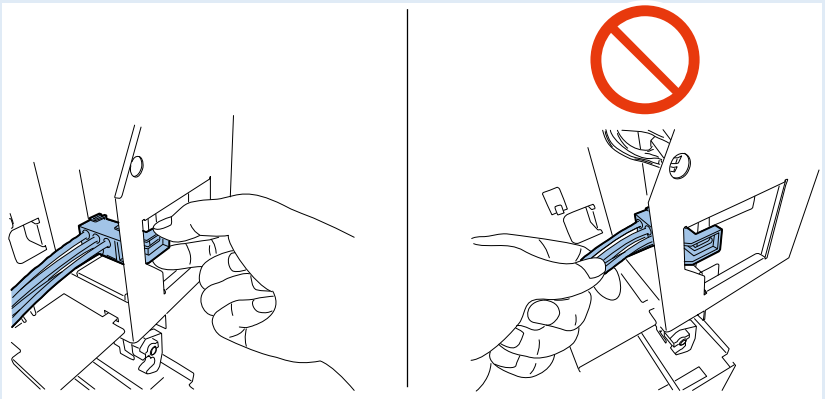

18) Insert Tube Joint into Saddle.

- 1 clamp

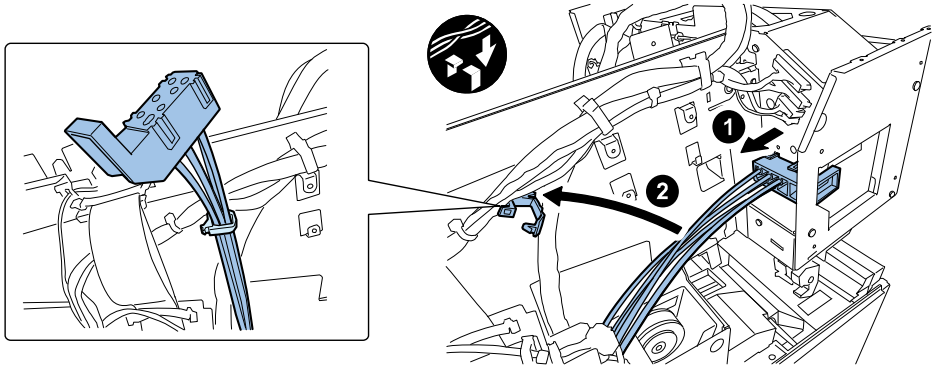

19) Remove connectors.

- 4 connectors

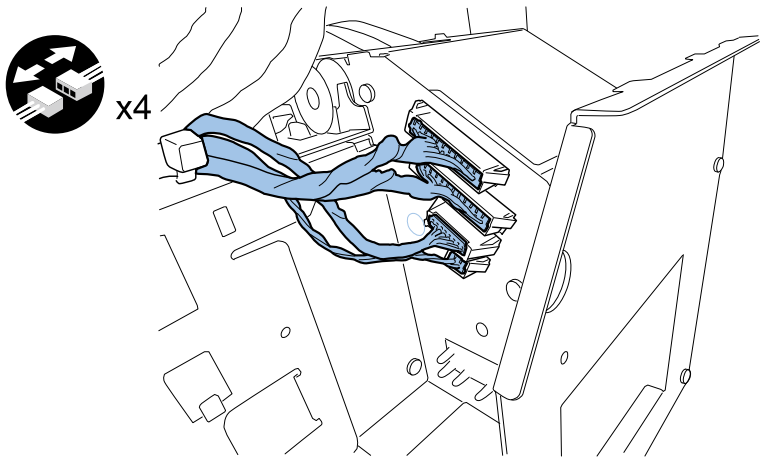

20) Remove Print Module.

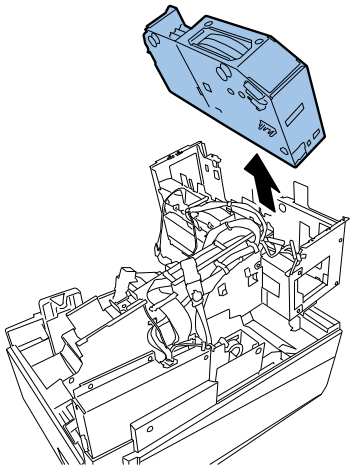

<Outline of Work After Print Module Replacement>

Main operation after Print Module replacement is shown below.

- Note new adjustment values.
  - Printhead wipe position, Printhead capping position, Printhead printing position indicated the label on new Print Module
  - Purge Unit wipe position indicated on the label on new Purge Unit side surface
- Install Printhead and external covers, and then load ink.
- Enter adjustment values.
- Clear Consumables Counters of Purge Unit and Blade Cleaner.
- Carry out registration adjustment.

Replacement Parts and Consumables

Removing Blade Cleaner

1) Select [Parts Replacement] of Service Utility, check the [Blade Cleaner] of Consumable Parts Replacement, click [Start] to move Blade Cleaner to the replacement position.

2) Remove Maintenance Cover. (Refer to ch. "Removing Maintenance Cover".)

   - 2 screws

3) Remove Print Module Cover.

   - 4 screws

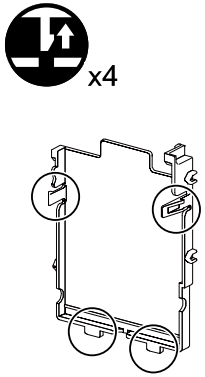

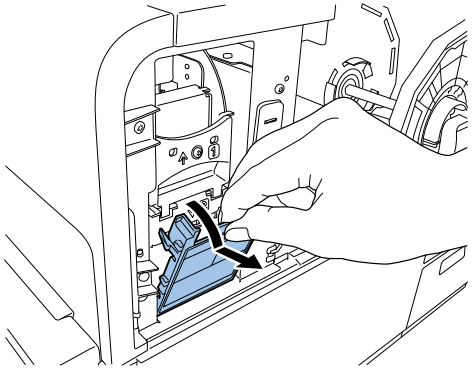

4) Raise Upper Printhead Release Lever.

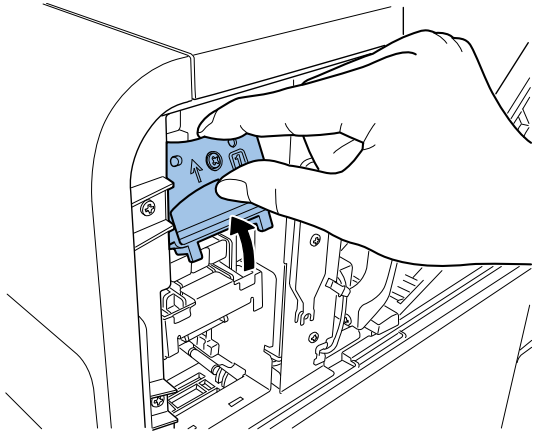

5) Take down Lower Printhead Release Lever.

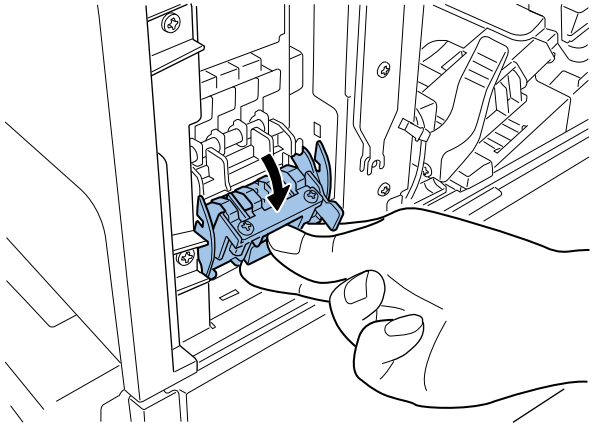

6) Remove Blade Cleaner.

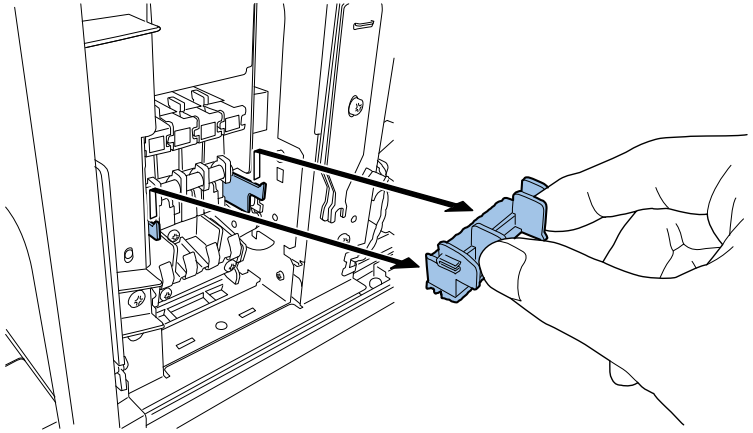

NOTE:

Service Utility has been used to replace Blade Cleaner, the counter is cleared automatically.

Replacing Printhead Unit

CAUTION:

Semiconductive components are used in the printhead.
As careless handling of the printhead under low humidity may cause electrostatic destruction in it, be sure to wear a grounding wrist strap prior to the handling.

CAUTION:

- To confirm Printhead Unit is in the correct position, see if the end of Printhead Unit grip and the edge of the inner metal plate are in the same plane as shown in the figure.
- If Printhead Unit is insufficiently inserted, Lower Printhead Release Lever cannot be closed.

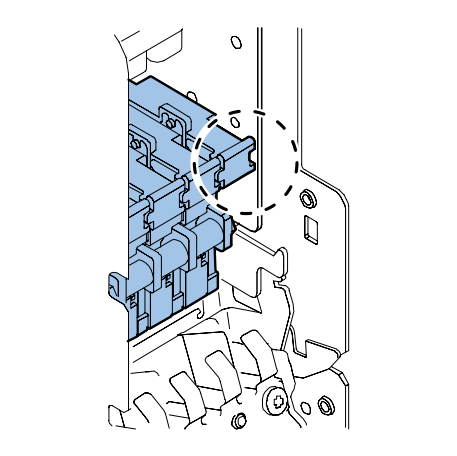

CAUTION:

When installing Printhead Unit, confirm that Upper Printhead Release Lever is firmly closed as shown in the figure. Improper closing of Upper Printhead Release Lever may cause Printer failure.

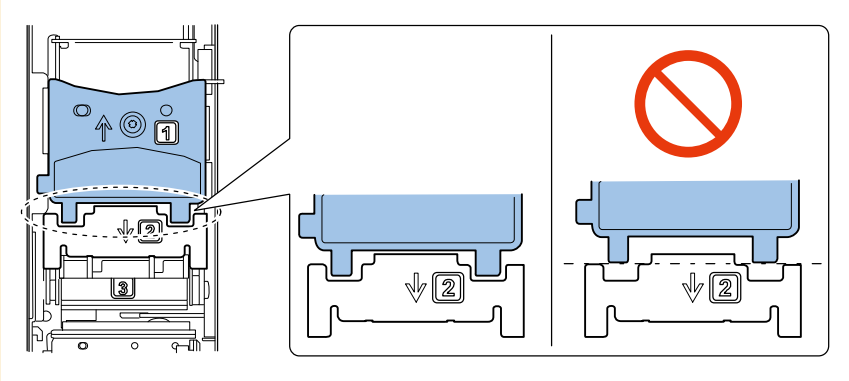

CAUTION:

- Do not turn the power off or open covers and doors during ink loading.
- Should Power Key be switched OFF or covers be opened during ink loading, its operation will be terminated and has to be started from the beginning. In such a case, turn on the power to start ink loading again.
- Restarting the ink loading results in more ink consumption.

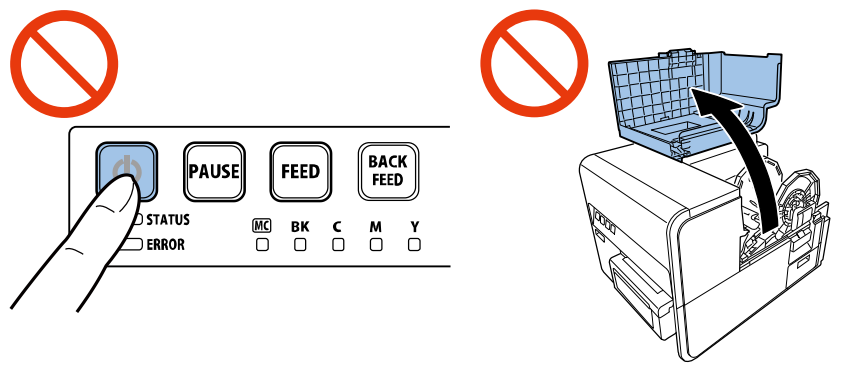

NOTE:

- Initial ink loading takes about 25 minutes.
- Ink loading time might be changed due to the design change.

CAUTION:

- Before removing Printhead Unit, move Printhead Unit to the position shown below (Printhead replacement position) using Service Utility. Then, open Upper Printhead Release Lever and remove Printhead.
- Do not open Upper Printhead Release Lever forcibly when it is at a position where it cannot be opened/closed. A failure can result.

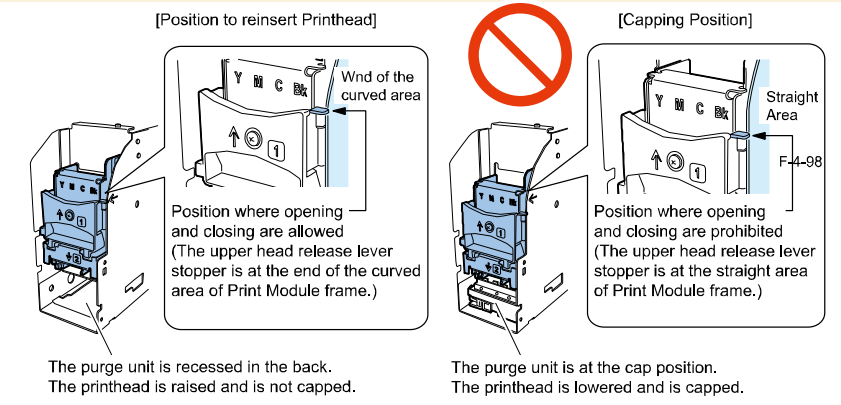

1) Select [Parts Replacement] in Service Utility, check [Head] check box under Consumables Replacement and click [Start Replacement] to drain ink.

2) Remove Maintenance Cover. (Refer to ch. "Removing Maintenance Cover".)

   - 2 screws

3) Remove Printhead Replacement Tool.

   - 2 screws

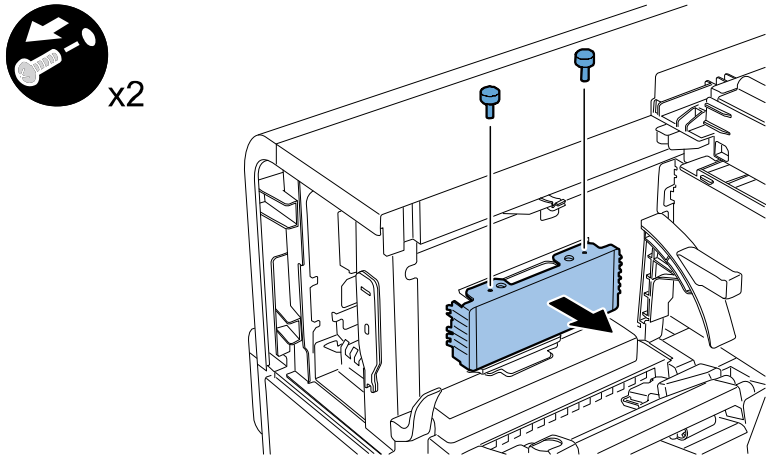

4) Remove Tube. (Refer to ch. "Removing Tube".)

5) Remove Blade Cleaner. (Refer to ch. "Removing Blade Cleaner".)

6) Draw out Printhead Unit and place it on Printhead Replacement Tool removed at step 3).

CAUTION:

- Removed Printhead Unit must be placed on Printhead Replacement Tool.
- Leaving Printhead Unit which is removed from Printer causes of non-discharge because Printhead nozzles dry. So install Printhead to Printer immediately after the work.

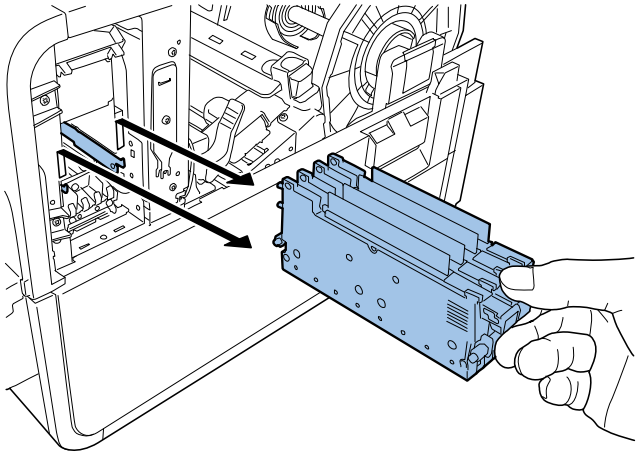

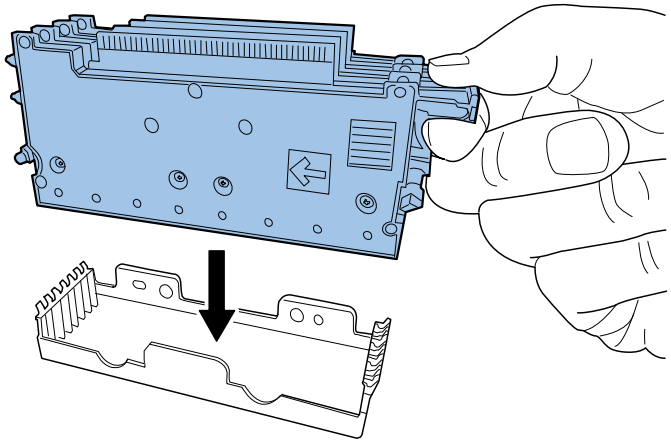

CAUTION:

Do not touch the terminal pins of Printhead PCB and Printhead face. A failure can result.

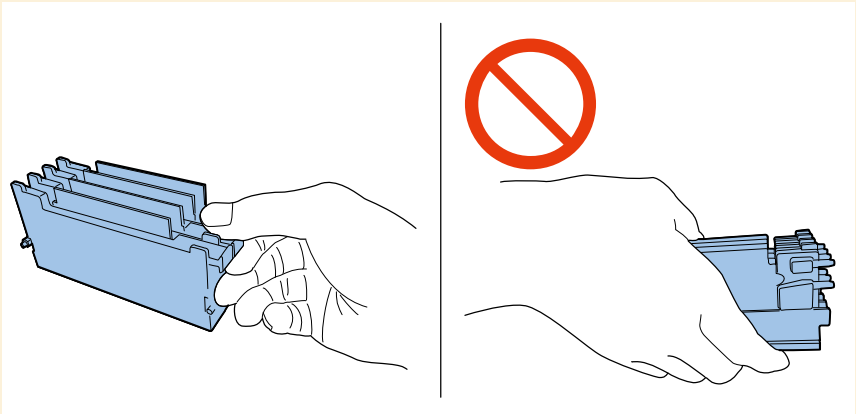

7) Bend Tube in U shape and insert it Printhead Unit.

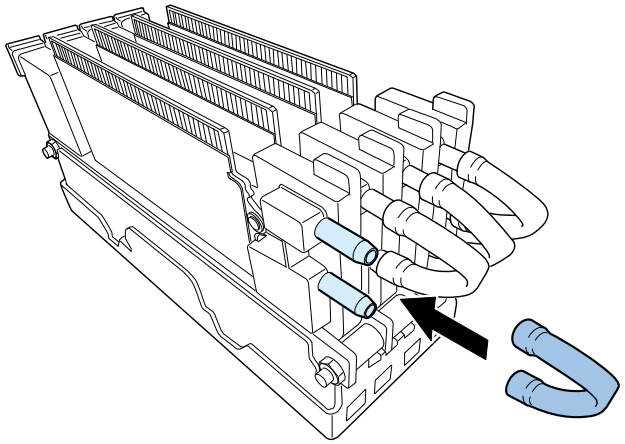

<Outline of Operation After Printhead Unit Replacing>

Main operation after Printhead Unit replacement is shown below

- Install Printhead and external cover, and load the ink.
- Perform registration adjustment.

Replacing Printhead

CAUTION:

Semiconductive components are used in the printhead.
As careless handling of the printhead under low humidity may cause electrostatic destruction in it, be sure to wear a grounding wrist strap prior to the handling.

CAUTION:

- To confirm Printhead Unit is in the correct position, see if the end of Printhead Unit grip and the edge of the inner metal plate are in the same plane as shown in the figure.
- If Printhead Unit is insufficiently inserted, Lower Printhead Release Lever cannot be closed.

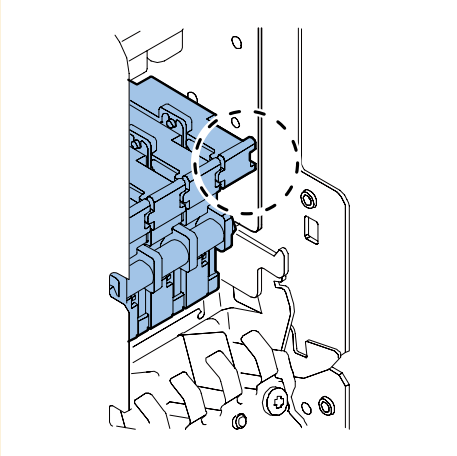

CAUTION:

When installing Printhead Unit, confirm that Upper Printhead Release Lever is firmly closed as shown in the figure. Improper closing of Upper Printhead Release Lever may cause Printer failure.

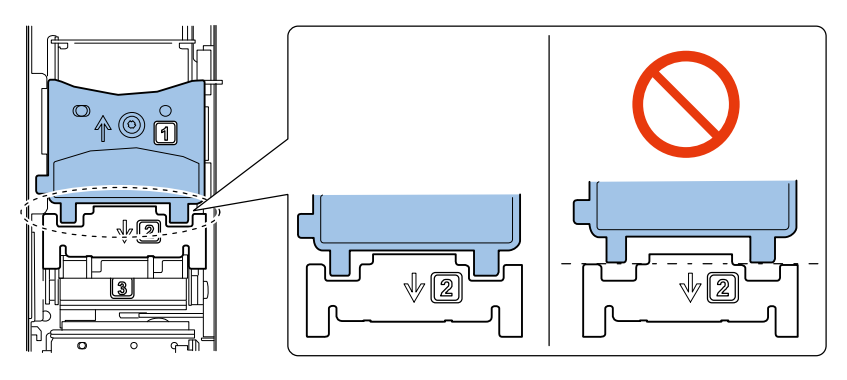

CAUTION:

- Do not turn the power off or open covers and doors during ink loading.
- Should Power Key be switched OFF or covers be opened during ink loading, its operation will be terminated and has to be started from the beginning. In such a case, turn on the power to start ink loading again.
- Restarting the ink loading results in more ink consumption.

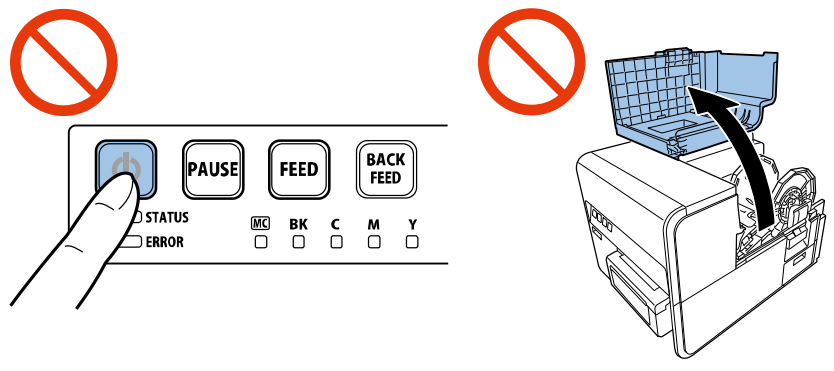

NOTE:
- Initial ink loading takes about 25 minutes.
- Ink loading time might be changed due to the design change.

CAUTION:
- Before removing Printhead Unit, move Printhead Unit to the position shown below (Printhead replacement position) using Service Utility. Then, open Upper Printhead Release Lever and remove Printhead.
- Do not open Upper Printhead Release Lever forcibly when it is at a position where it cannot be opened/closed. A failure can result.

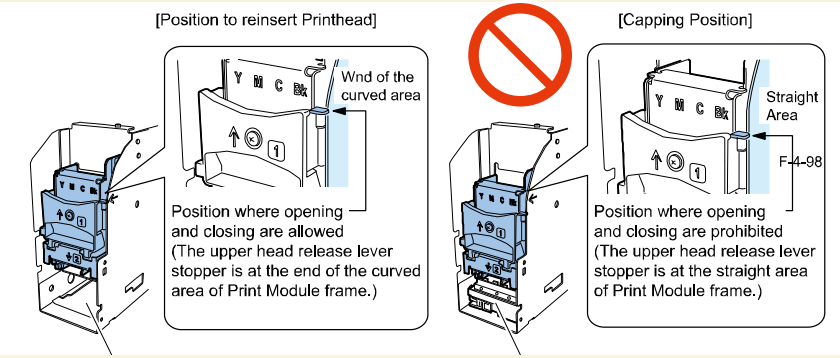

1) Remove Head Unit. (Refer to ch. "Replacing Printhead Unit".)

2) Remove 2 wrenches.

   - 1 screw

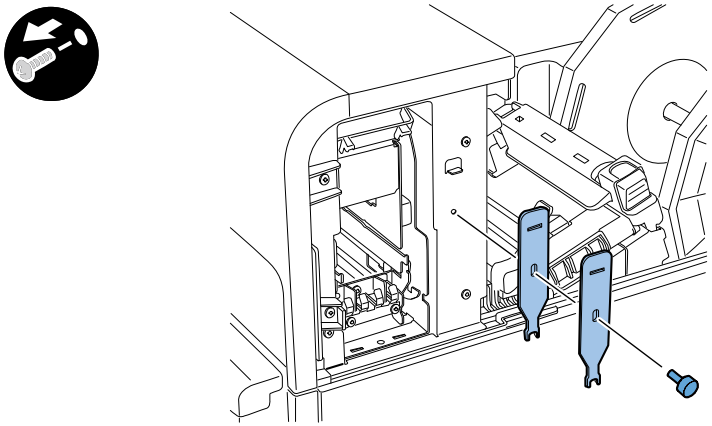

3) Remove Shaft and 2 Stoppers.

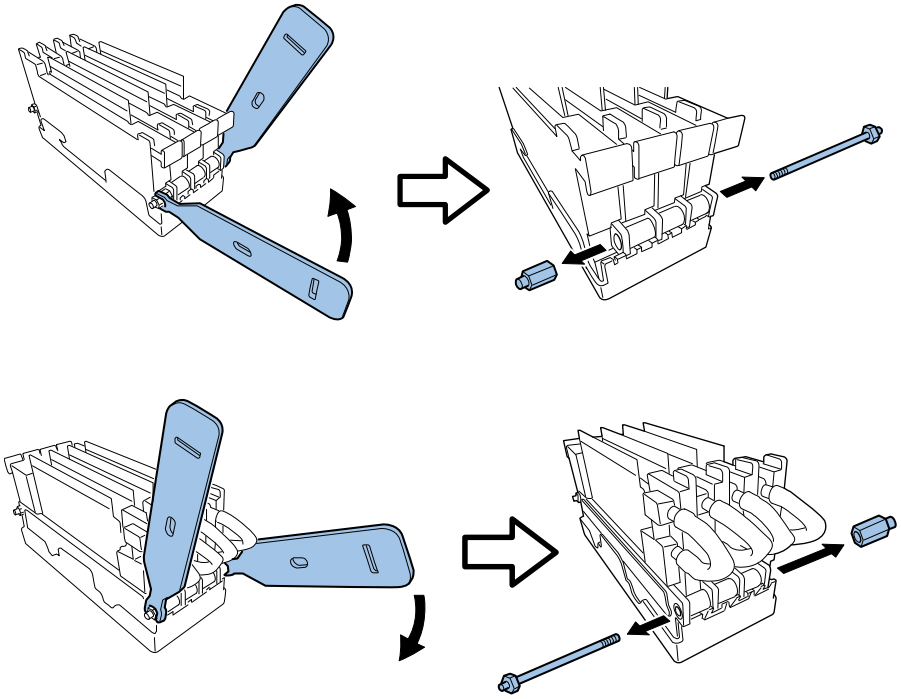

4) Take out Printhead for replacement.

NOTE:
- When replacing Printhead of Cyan, remove Printhead of Black and Spacer as well.
- When replacing Printhead of Magenta, remove Printhead of Yellow and Spacer as well.
- Store the removed Spacer which will be used for Printhead installation.

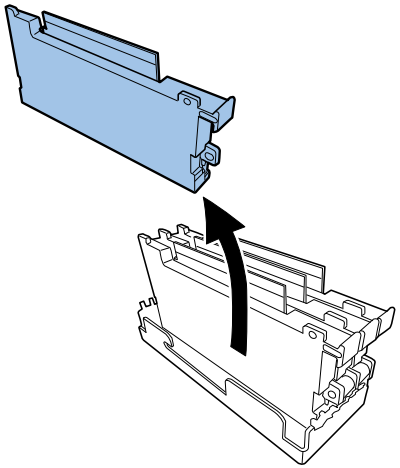

<Printhead Installation Procedure>

1) Paste Color ID Label on Printhead.

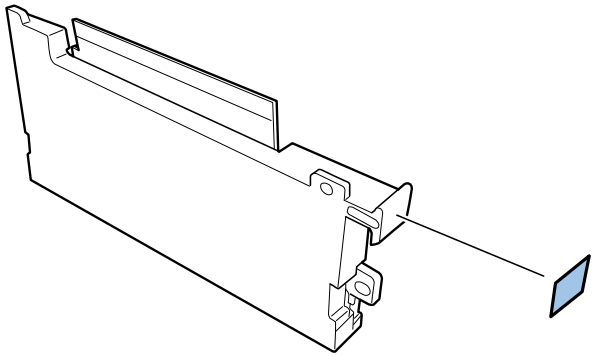

2) Place Spacer and Printhead in position.

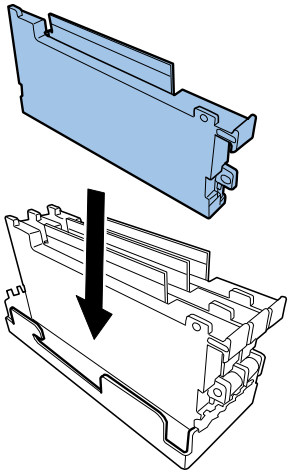

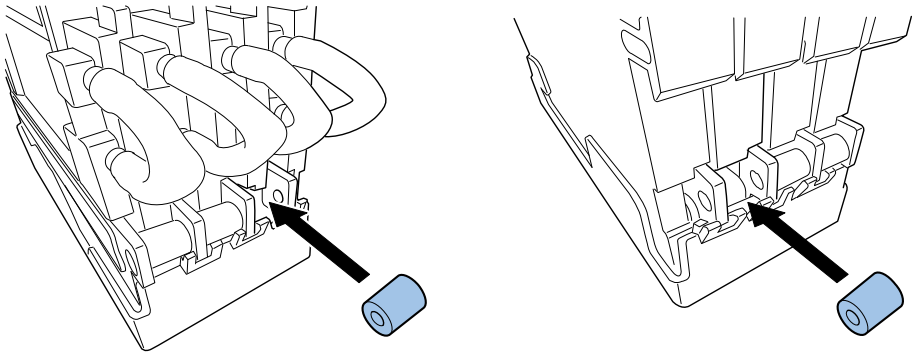

3) Pass Shaft through.

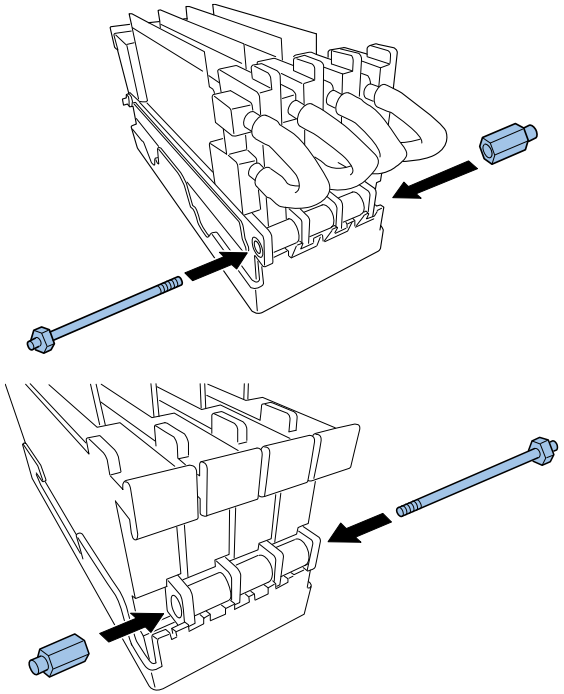

4) Secure Shaft with wrenches and tighten Stopper.

5) While holding Tube, attach it to Head Unit.

<Outline of Operation After Printhead Replacing>

Main operation after Printhead replacement is shown below.

- Install Print head and external cover, and load the ink.
- Perform registration adjustment.

Removing Purge Unit

1) Select [Parts Replacement], check [Purge Unit] of durable part, click [Start Replacement] to move Purge Unit to replacing position.

2) Remove Maintenance Cover. (Refer to ch. "Removing Maintenance Cover".)

3) Remove Print Module Cover.

- 4 Claws

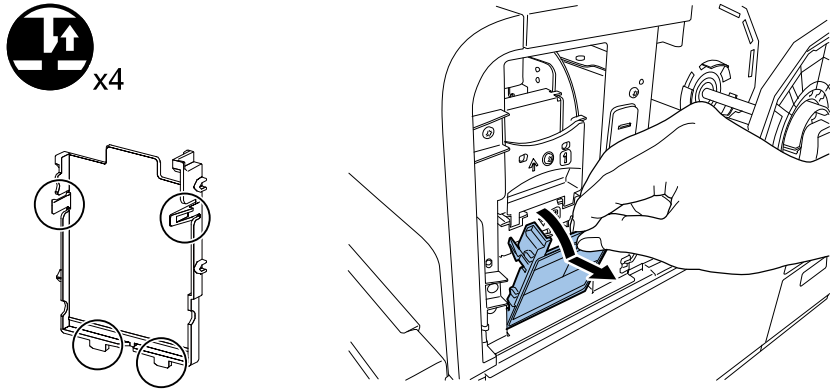

4) Release Lock

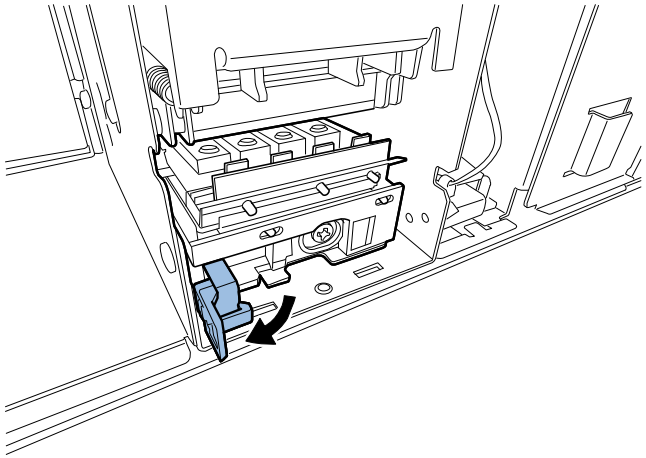

5) Draw out Purge Unit while holding Lock.

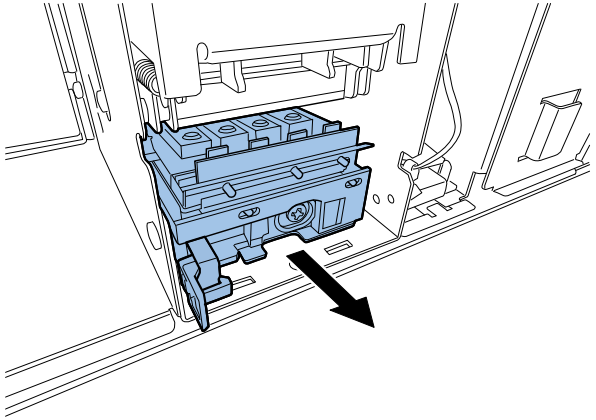

CAUTION at installation:

Surely close Lock, when installing Purge Unit.

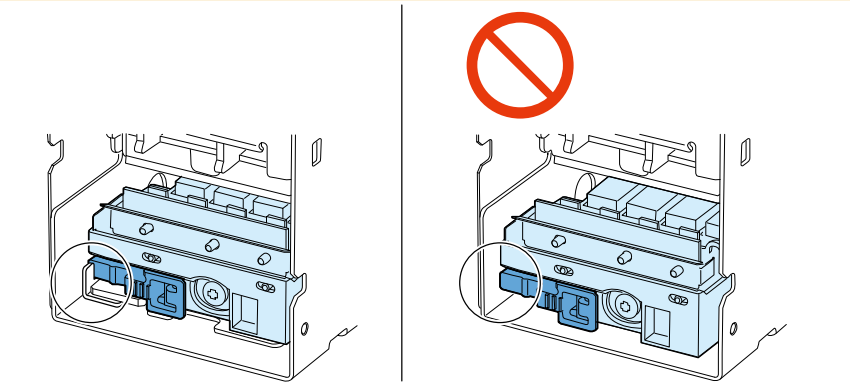

<Outline of Operation After Purge Unit Replacement>

Main operation after Purge Unit Replacement is shown below.

- Note adjustment value in the label on new Purge Unit.
- Perform Blade position adjustment.
- Attach covers.
- Enter adjustment value.
- Perform registration adjustment.
- Service Utility has been used to replace Purge Unit, the counter is cleared automatically.

Removing Tube

1) Open Roll Cover.

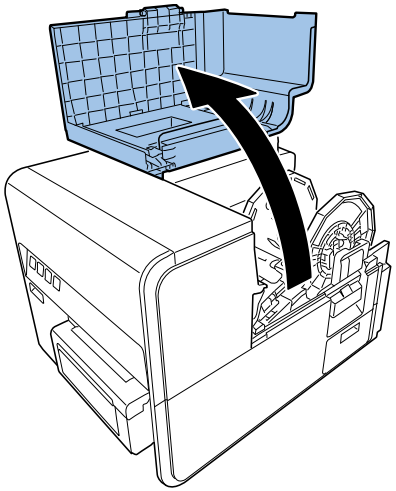

2) Remove Roll Holder.

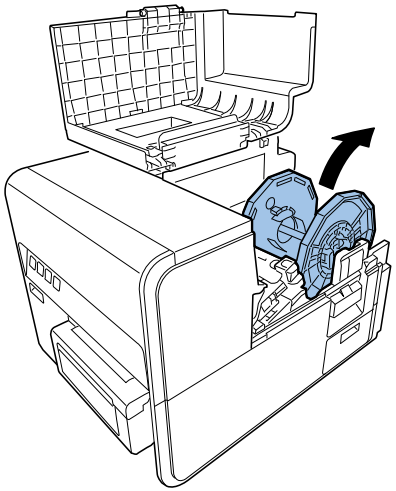

3) Remove Roll Tray.

- 3 screws

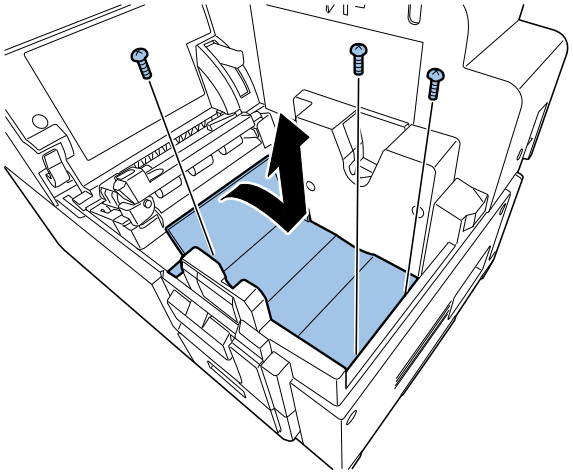

4) Remove Tube.

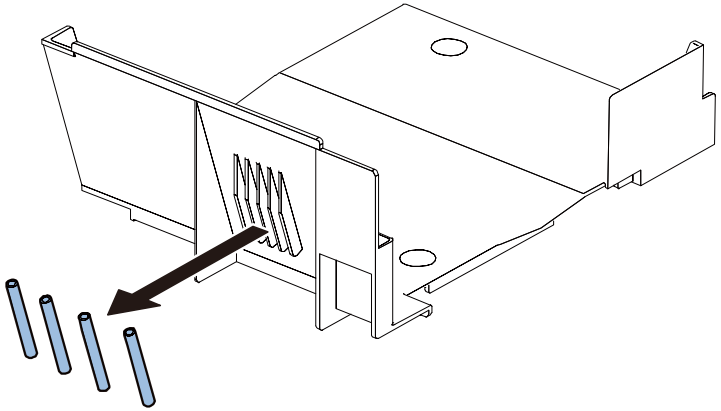

Removing Transport Unit

1) Open Roll Cover.

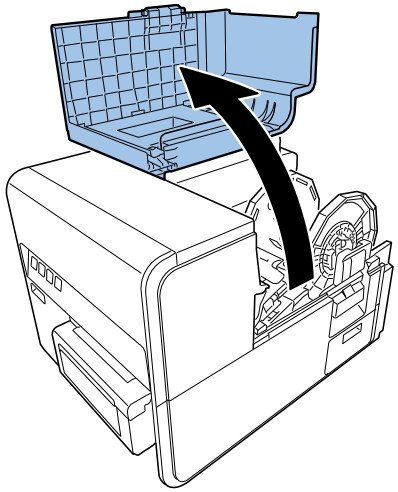

2) Press Upper Unit Open Lever and open.

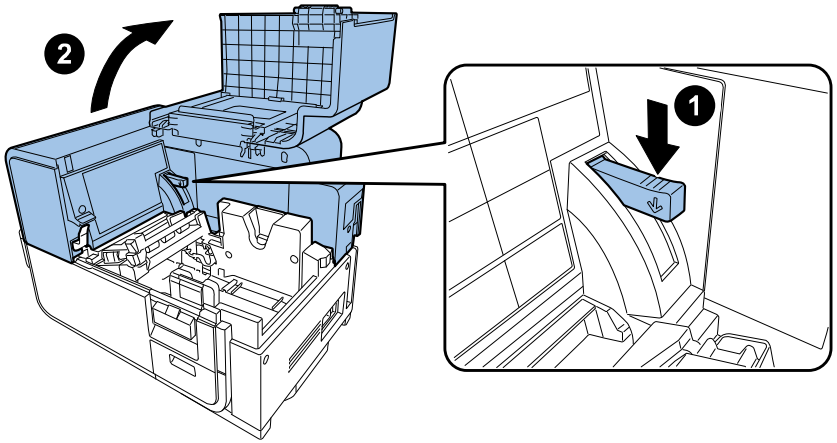

3) Open Cutter Cover, slide Cutter to center, and remove Cutter Cover.

- 2 screws

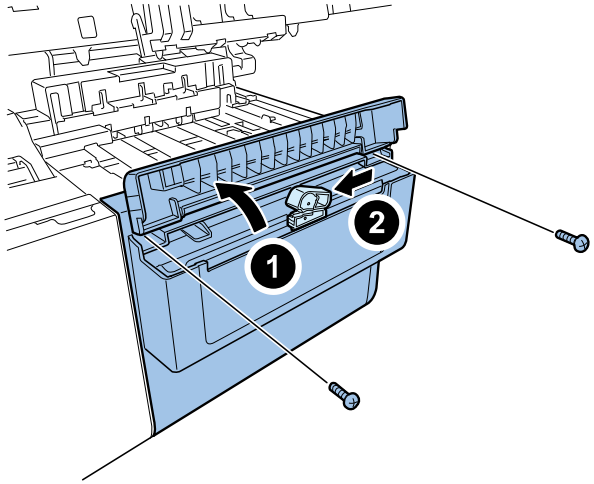

4) Remove Cutter Unit.

- 4 screws

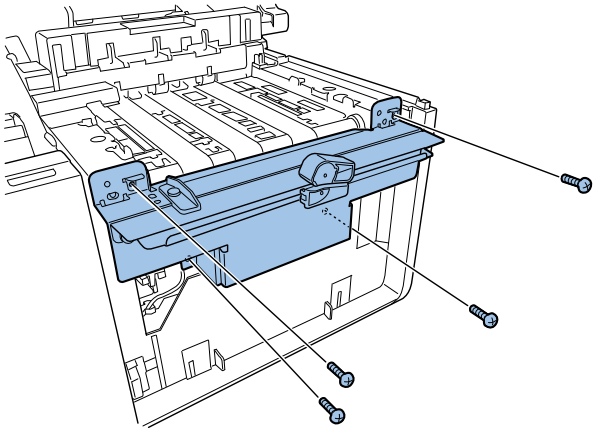

5) Open Ink Tank Door and remove Front Cover.

- 3 screws
- 3 Claw

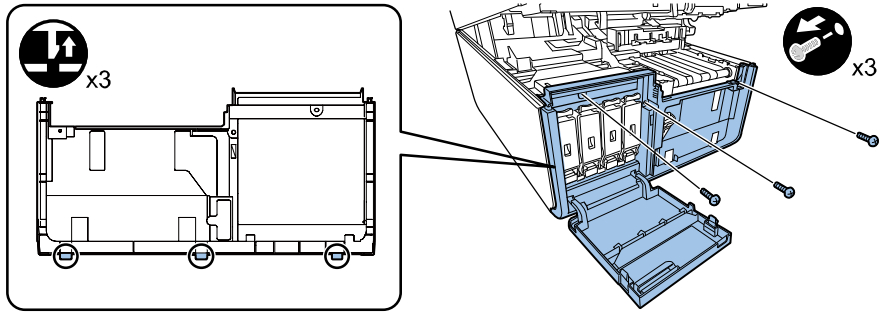

6) Remove Connector Cover.

- 1 screw
- 3 Claws

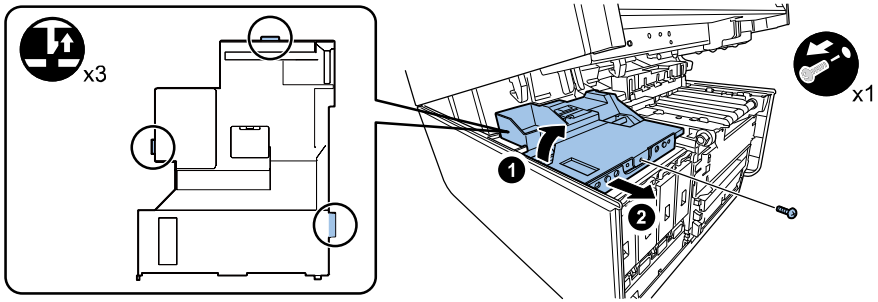

7) Remove Transport Unit Connectors.

- 2 connectors
- 3 clamps

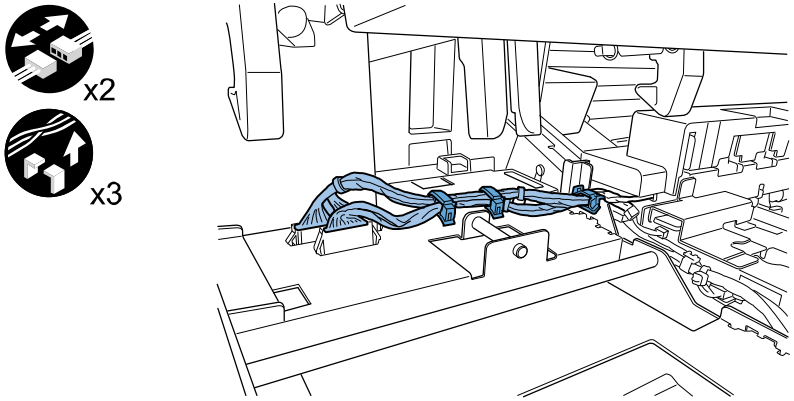

8) Remove Pinch Roller Cover.

- 2 screws

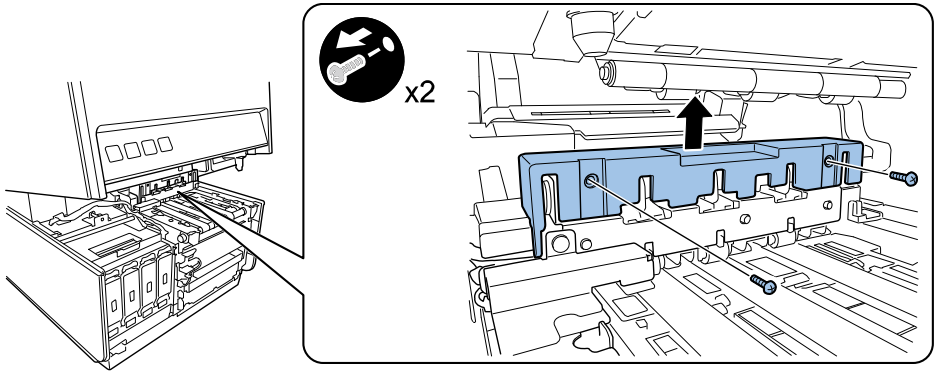

9) Remove Pinch Roller Pressure Release Lever.

- 1 screw

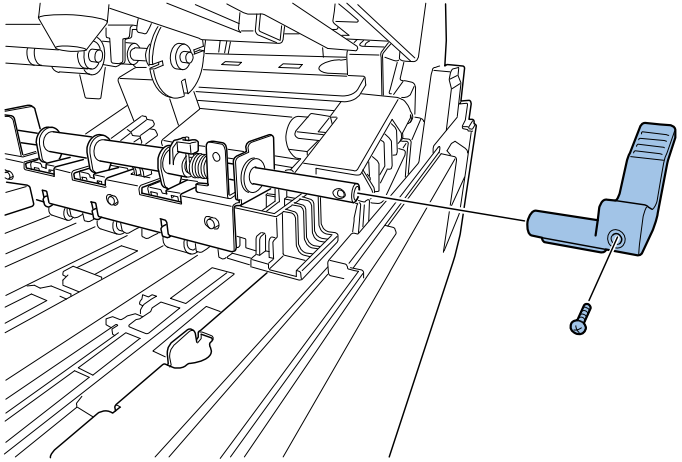

10) Remove Ink Tank Door Sensor Unit Connector.

- 1 connector
- 1 clamp

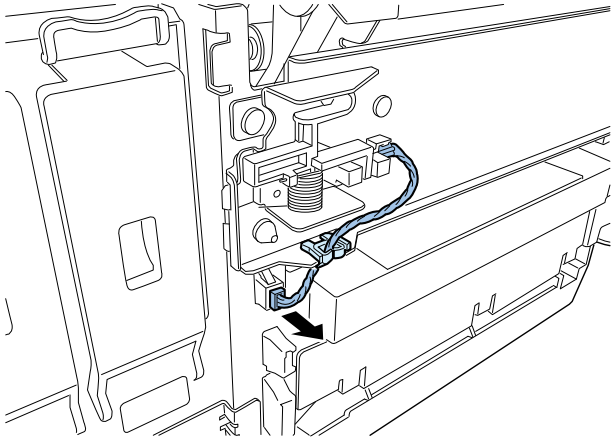

11) Remove Ink Tank Door Sensor Unit.

- 1 screw

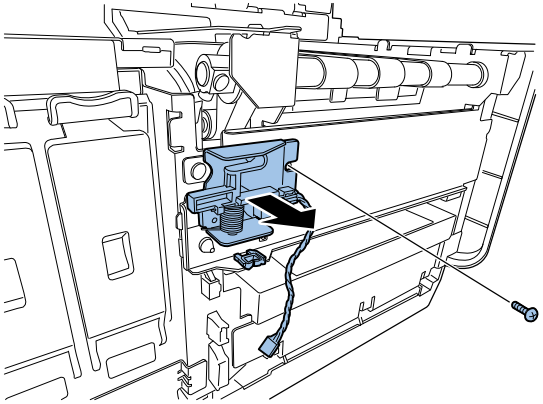

12) Remove Transport Unit.

- 4 screws

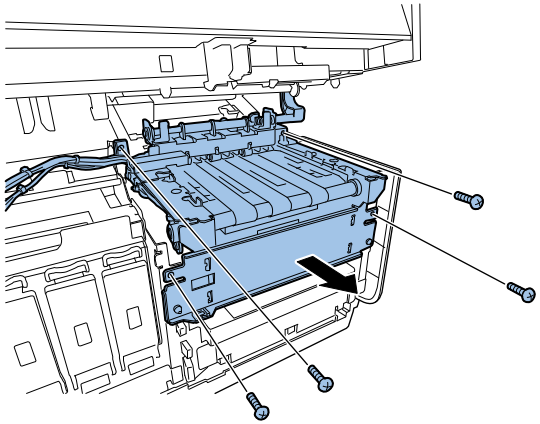

<Outline of Operation After Transport Unit Replacement>

Main operation after Transport Unit replacement is shown below.

- Clear durable parts counter of Transport Unit.
- Perform vertical scale adjustment.
- Perform registration adjustment.

PCB

Removing Needle Unit (Ink Tank Relay PCB)

1) Remove Ink Tank Holder Unit. (Refer to ch. "Removing Ink Tank Holder Unit".)

2) Remove Duct.

   - 2 screws

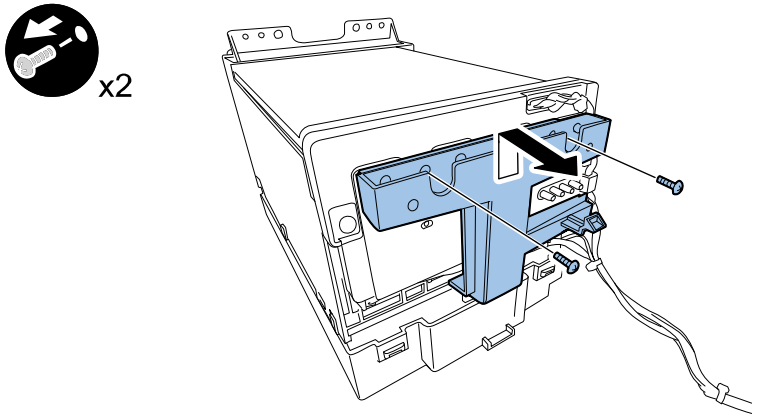

3) Remove Harness Connector and Harness from hooks.

   - 1 connector
   - 2 hooks

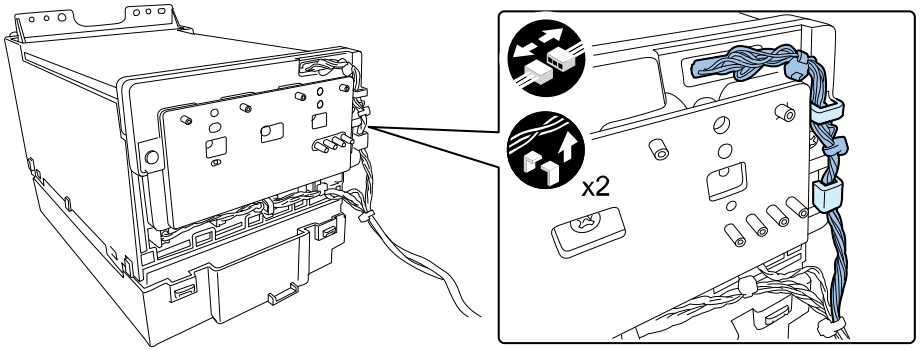

4) Remove Harness Connectors and remove Harness from Saddle.

   - 4 connectors
   - 1 clamp

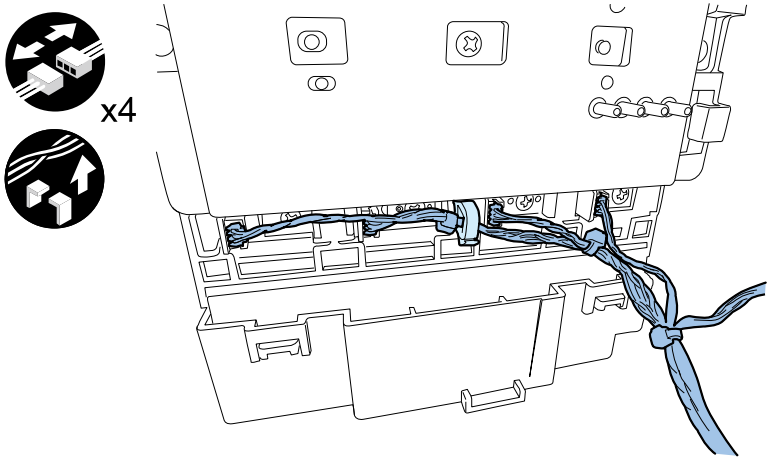

5) Remove Needle Unit.

   - 3 screws

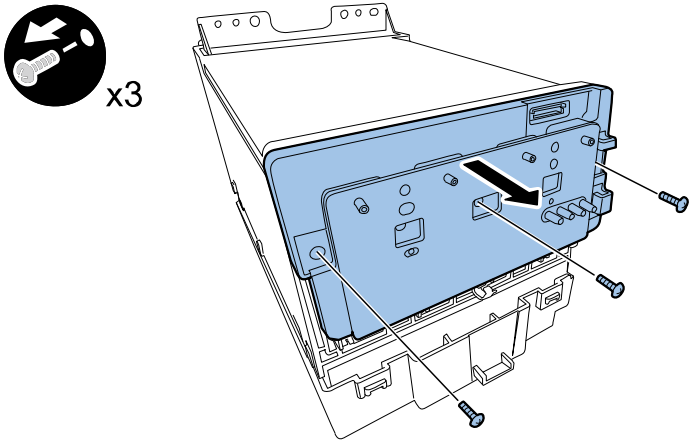

Removing Operation Panel PCB

1) Remove Upper Cover Unit. (Refer to ch. "Removing Upper Cover Unit".)
2) Remove Maintenance Cover.
3) Remove Operation Panel.
   - 4 screws

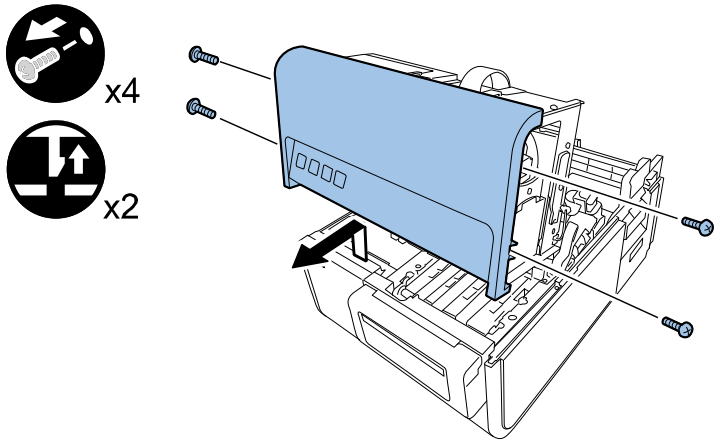

4) Remove connector.
   - 1 connector

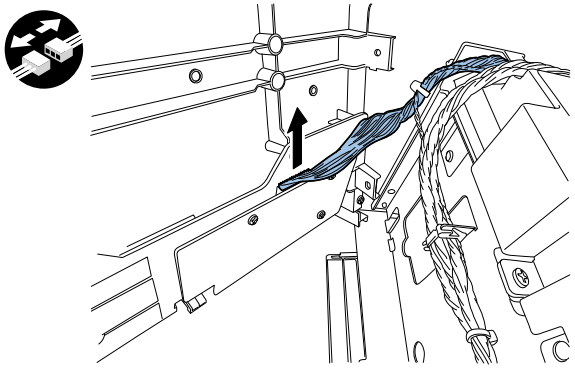

5) Remove Operation Panel PCB.
   - 4 screws

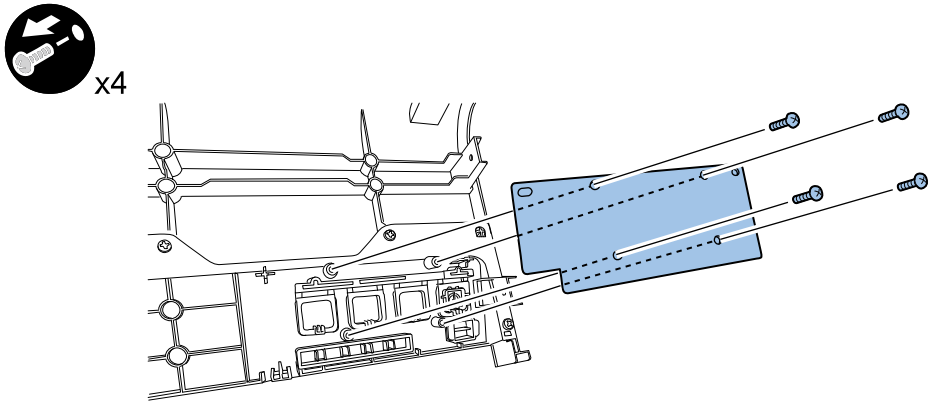

Removing Printer Controller PCB

1) Using the service utility, retrieve the data to the PC.

   Troubleshooting > Service Tool > Service Utility > Operation > Parts Replacement > PCB Replacement,Serial Setting

NOTE:
In the case, data in old PCB cannot be retrieved to PC, enter adjustment value and perform image position adjustments using the service utility after replacement of Printer Controller PCB.

2) Remove Upper Cover Unit. (Refer to ch. "Removing Upper Cover Unit".)
3) Remove Left Cover. (Refer to ch. "Removing Left Cover".)
4) Remove Rear Cover. (Refer to ch. "Removing Rear Cover".)
5) Remove screws securing PCB Cover.
   - 12 screws

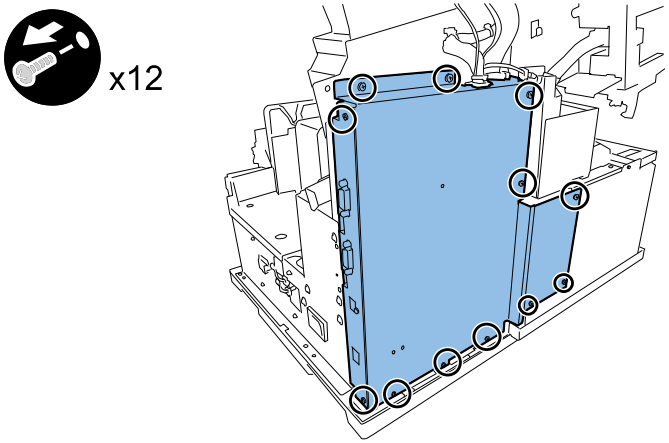

6) Remove Harness from Saddle and remove PCB Cover.
   - 2 clamps

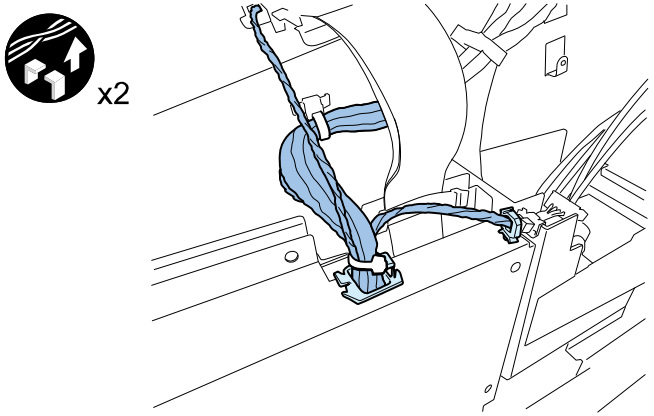

7) Remove all connectors on PCB.
   - 21 connectors

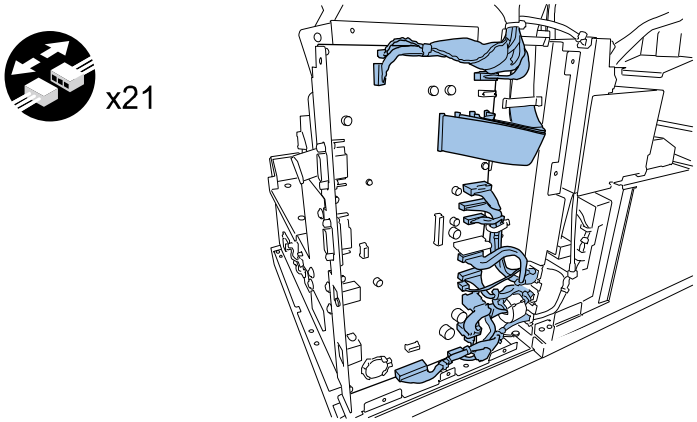

CAUTION:
Do not touch the terminal pins of Flexible Cable. A failure can

8) Remove Printer Controller PCB.

- 9 screws

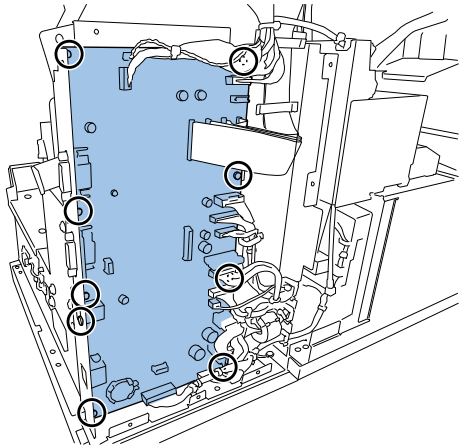

CAUTION:
When replacing PCB, be careful below.
- Keep the cap and the grounding plate.
- Install the cap and the grounding plate surely.

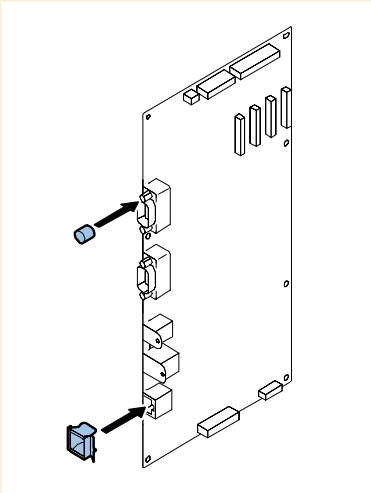

CAUTION:
Set the harness as following figure.

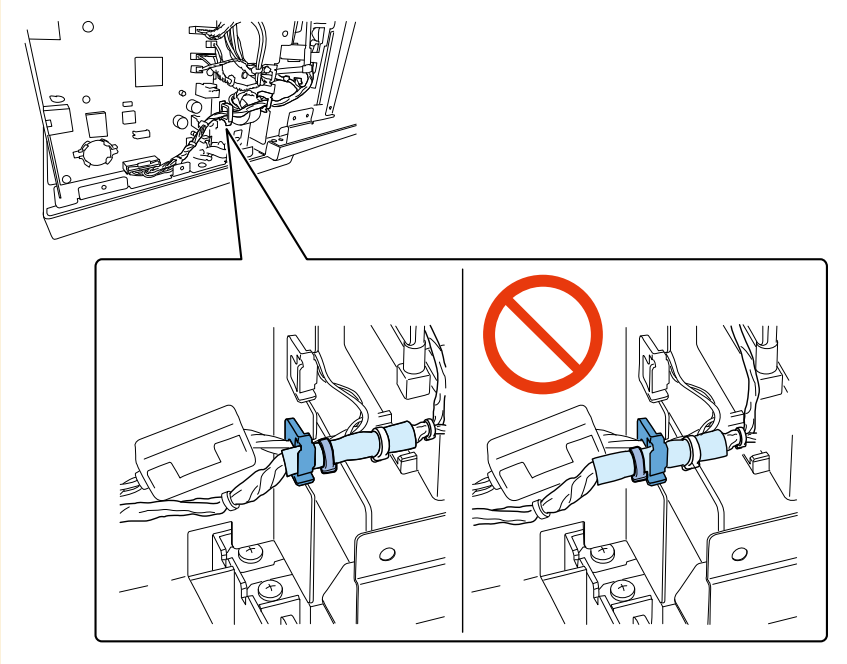

<Actions After Printer Controller PCB Replacement>

Main operation after Printer Controller PCB replacement is shown below.

- In the case, data in old PCB can be retrieved to PC, save the data to the PC using the service utility.
- In the case, data in old PCB cannot be retrieved to PC, enter adjustment value and perform image position adjustments using the service utility.
  - Serial number entry
  - Adjustment values entry (labeled)

    Head Wipe Position, Head Cap Position, Head Print Position, Purge Unit Wipe Position, Head to Platen Distance.

    These adjustment values are indicated on labels.
  - Set the product destination for US.
  - Paper Guide Position Adjustment
  - Vertical scale adjustment
  - Adjust the image position. (adjustment in order of vertical scale, slant, registration)
- After Controller PCB replacement, update to the latest firmware version.

CAUTION:
The stored Printer Controller PCB data contains MAC address and other network information. When stored data is restored onto a new Printer Controller PCB, this information is also transferred along with the service settings, so note the following:

- When stored data is restored. Because the same network information before the Printer Controller PCB is replaced is transferred, there is no need to change the printer driver settings.
  Because the Printer Controller PCB that the stored data is restored onto has the same MAC address as the original Printer Controller PCB, do not install it in a printer with a different serial number.
- If the stored data cannot be restored Because network information such as the MAC address and IP address is not transferred, the printer driver must be reinstalled, or the print port must be reconfigured.

Removing DC Power Supply PCB

1) Remove Roll Drive Unit. (Refer to ch. "Removing Roll Drive Unit".)
2) Remove Roll Tray Frame.
   - 4 screws

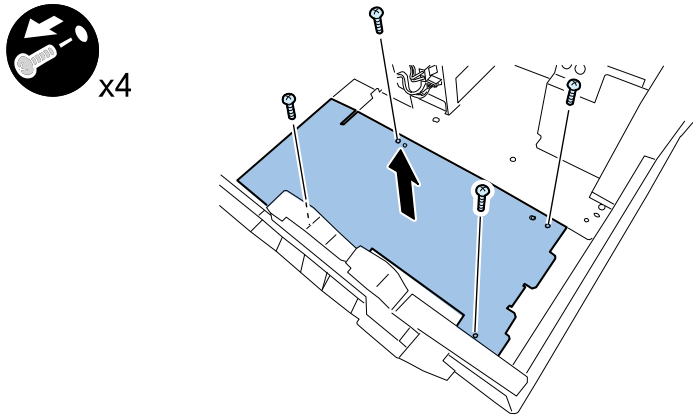

3) Remove connectors securing DC POWER SUPPLY PCB.
   - 4 connectors

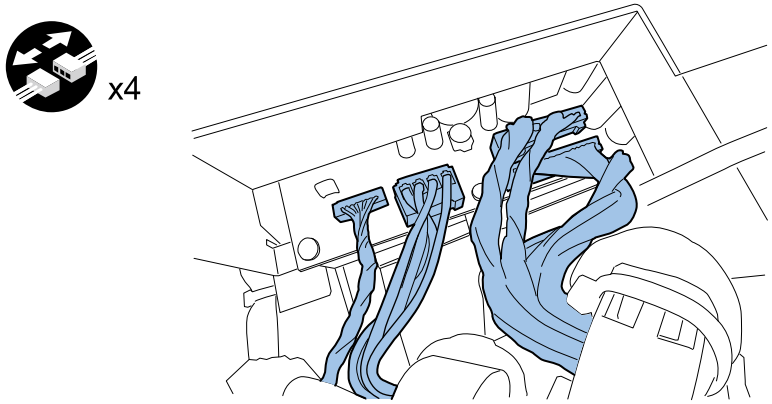

4) Remove Relay Connectors.

- 2 connectors

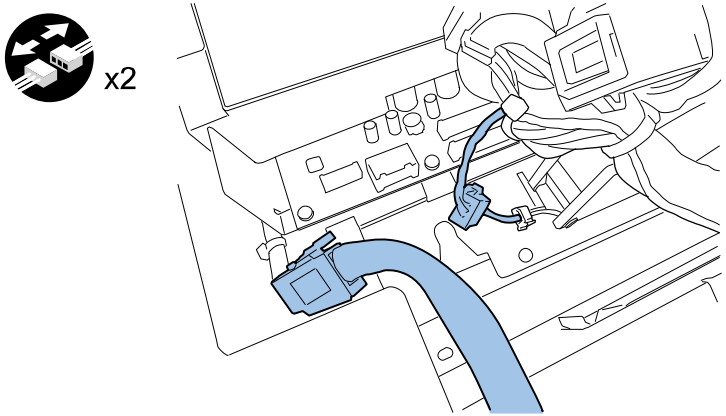

5) Remove screws securing Power Supply Unit.

- 1 screw

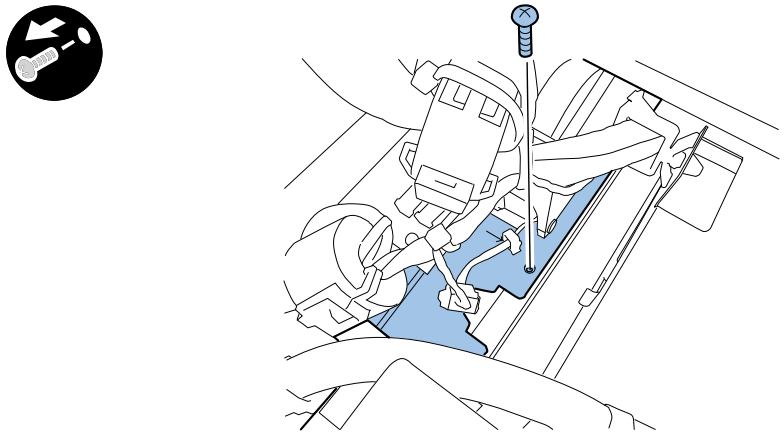

6) Open Cutter Cover, slide Cutter to center, and remove CutterCover.

- 2 screws

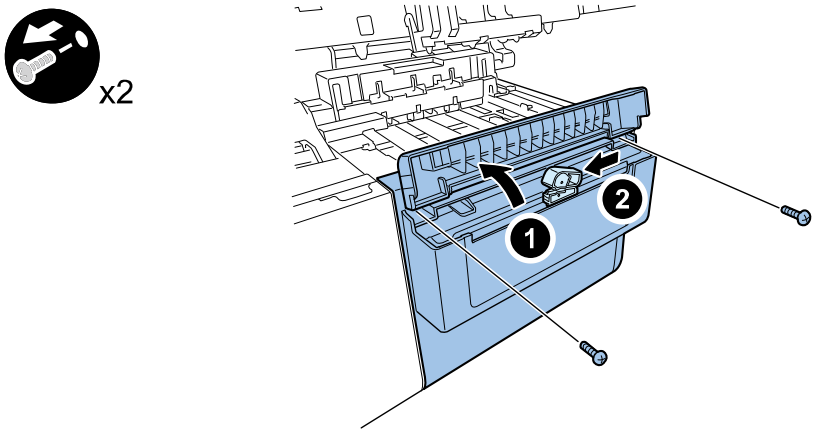

7) Remove Cutter Unit.

- 4 screws

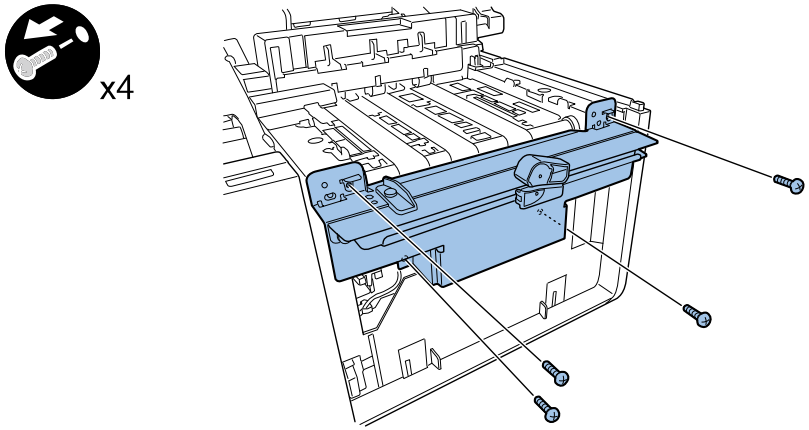

8) Open Ink Tank Door and remove Front Cover.

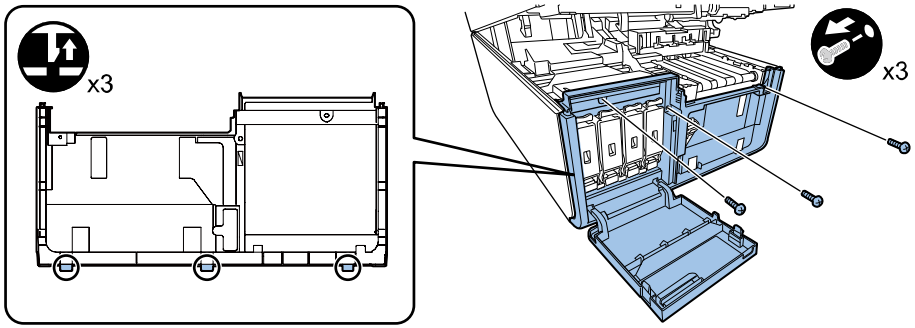

9) Remove Power Supply Unit.

- 2 screws

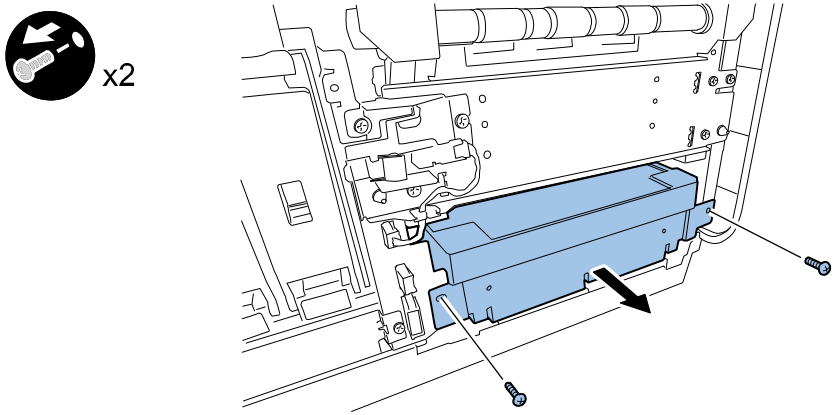

10) Remove Cover.

- 4 claws

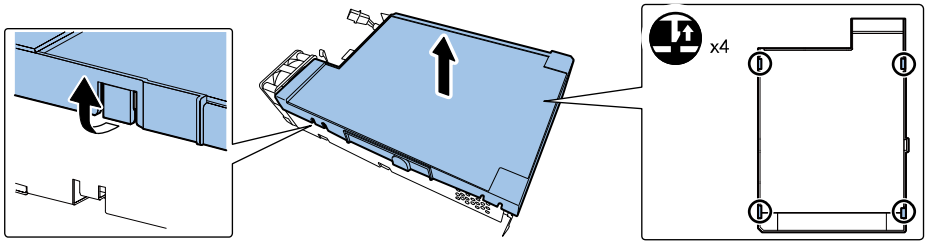

11) Remove Power Supply Plate.

- 2 screws

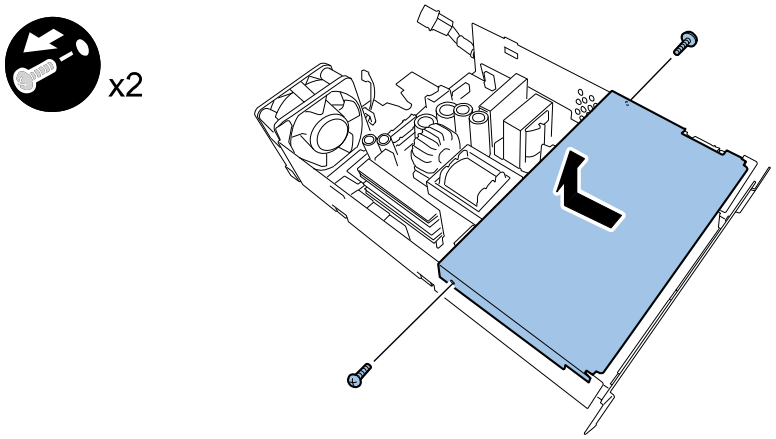

12) Remove connector from DC Power Supply PCB and remove it from saddle.

- 1 connector
- 1 clamp

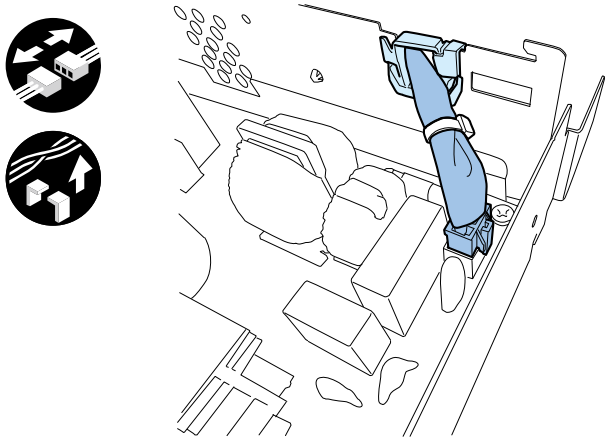

13) Remove screws securing DC Power Supply PCB and then remove DC Power Supply PCB.

- 10 screws

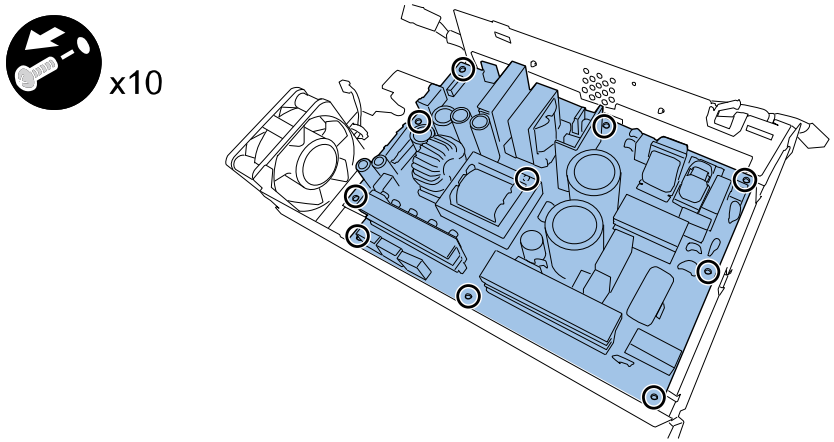

<Outline of Operation After DC Power Supply Unit PCB Replacement>

- In the case error code from 0211 to 0215 occurs, release the error using service utility.

Removing Maintenance Cartridge Relay PCB

1) Remove Printer Controller PCB. (Refer to ch. "Removing Printer Controller PCB".)

2) Remove Harness.

- 9 clamps

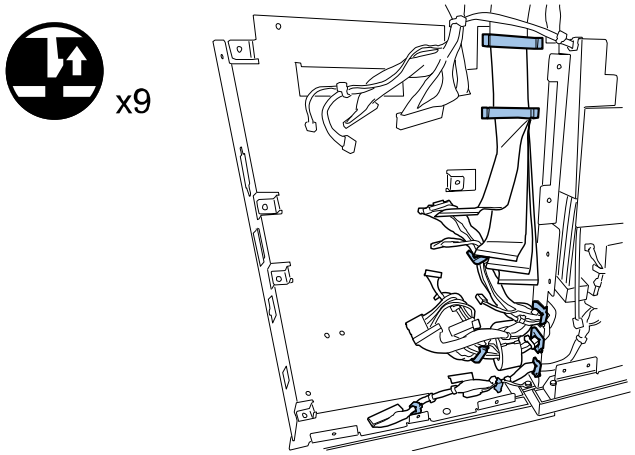

3) Remove PCB Stay.

- 4 screws

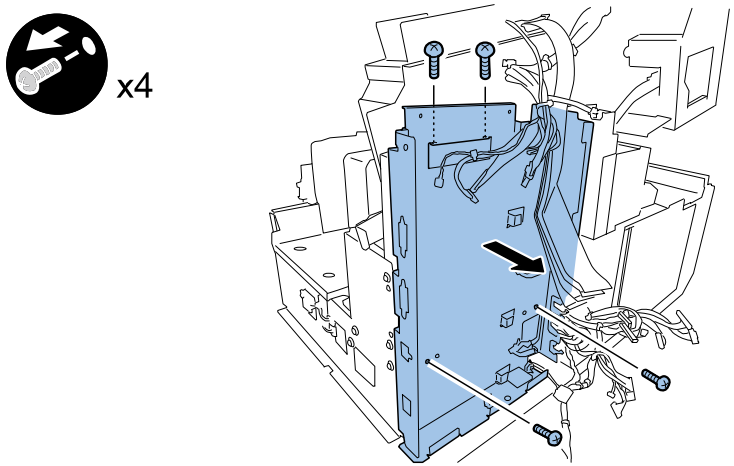

4) Remove Maintenance Cartridge Relay PCB Unit..

- 2 screws

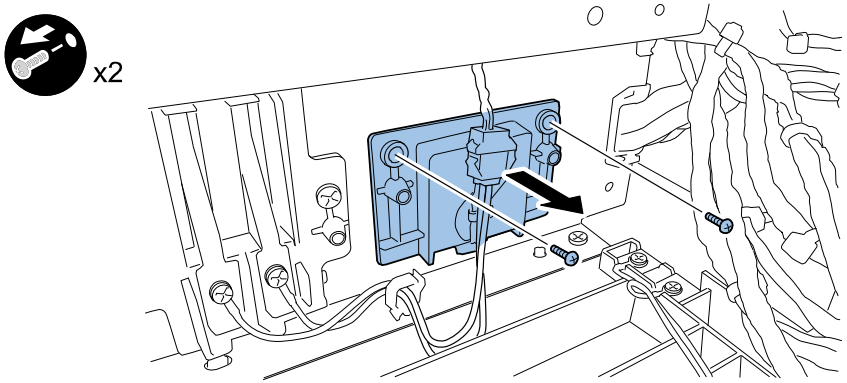

5) Remove Maintenance Cartridge Relay PCB.

- 2 screws
- 1 connector

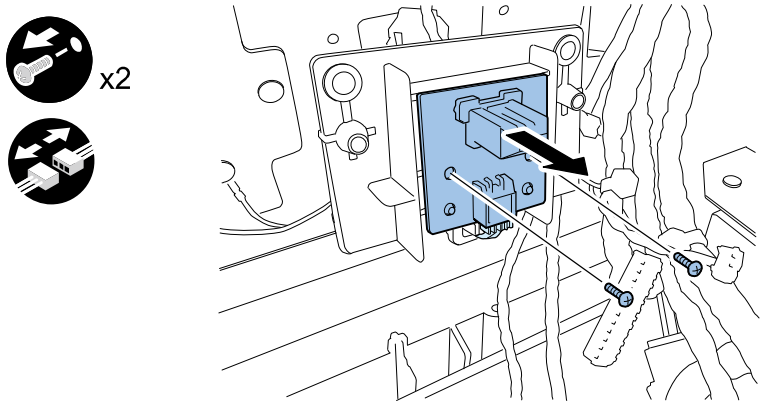

Removing Printhead Relay PCB

1) Remove Upper Cover. (Refer to ch. "Removing Upper Cover Unit".)
2) Remove Printhead Unit. (Refer to ch. "Replacing Printhead Unit".)
3) Release Flexible Cable connector.
   - 4 connectors

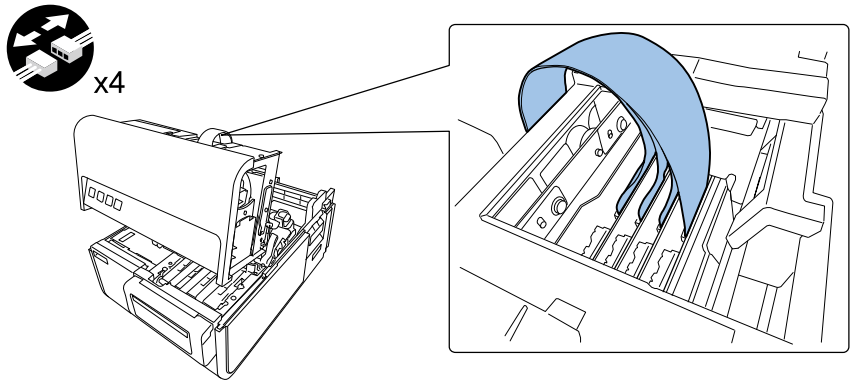

CAUTION:
- Do not touch the terminal pins of Flexible Cable. A failure can result.
- Be careful falling out or damage parts of the flexible cable connector.

4) Disconnect Printhead Relay PCB connector.

- 4 connectors

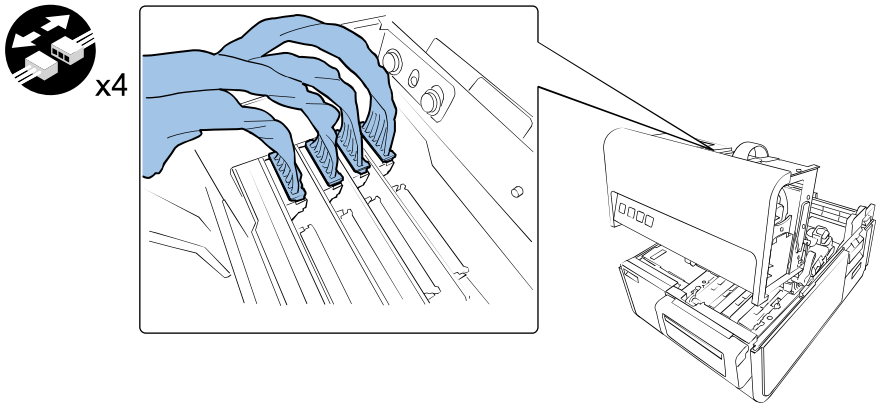

5) Remove Printhead Relay PCB.

- 2 screws

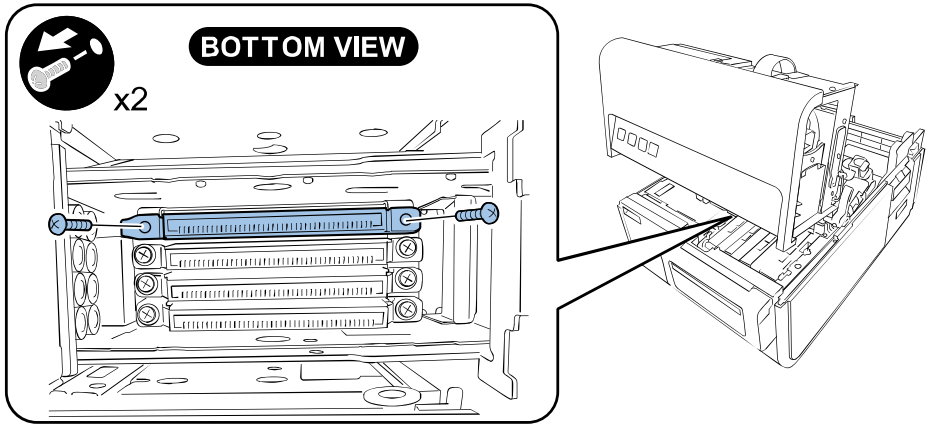

Motors

Removing Roll Motor

1) Remove Roll Drive Unit. (Refer to ch. "Removing Roll Drive Unit".)

2) Remove Roll Motor Cover.

   - 2 screws

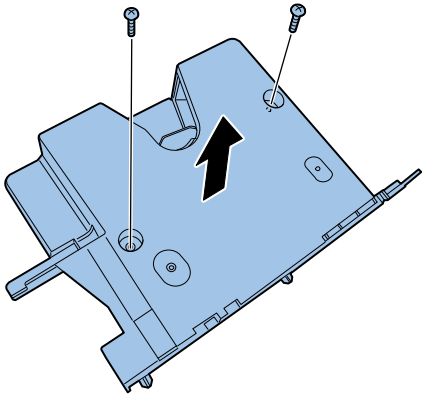

3) Remove a connector.

   - 1 connector

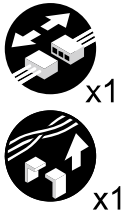

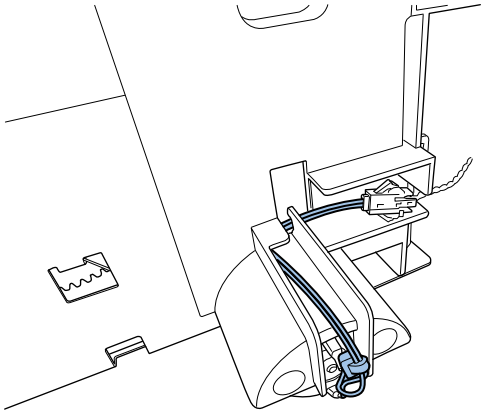

4) Remove Roll Motor Cover (Rear).

   - 2 screws

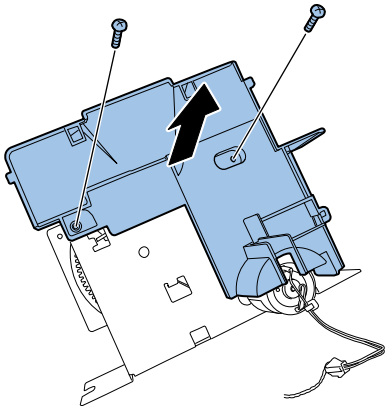

5) Remove Roll Motor.

   - 2 screws

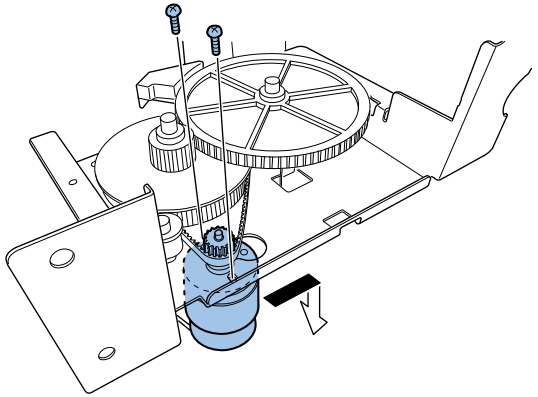

Removing Transport Motor

1) Remove Transport Unit. (Refer to ch. "Removing Transport Unit".)

2) Remove a connector.

- 1 connector
- 1 clamp

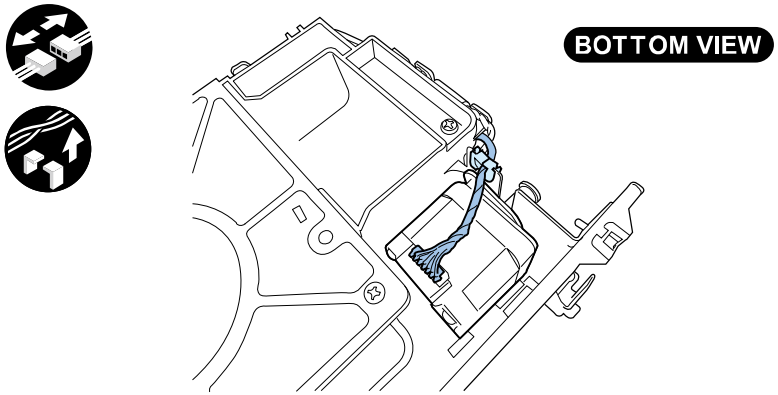

3) Remove Belt Tensioner.

- 1 screw

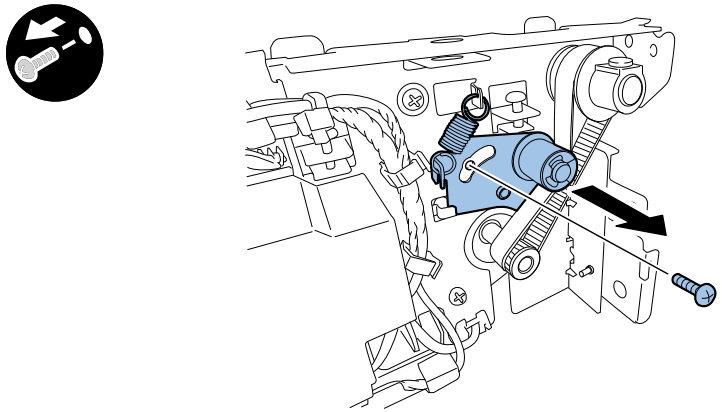

4) Remove Timing Belt.

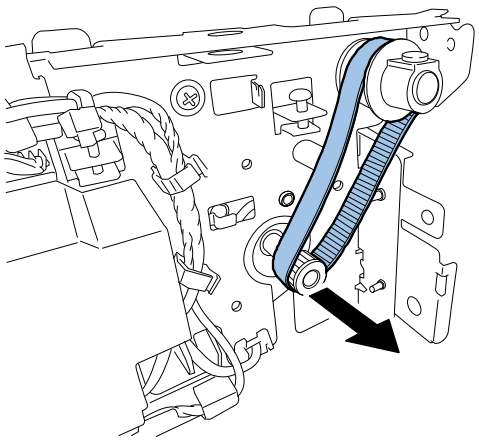

5) Remove screws securing Transport Motor.

- 2 screws

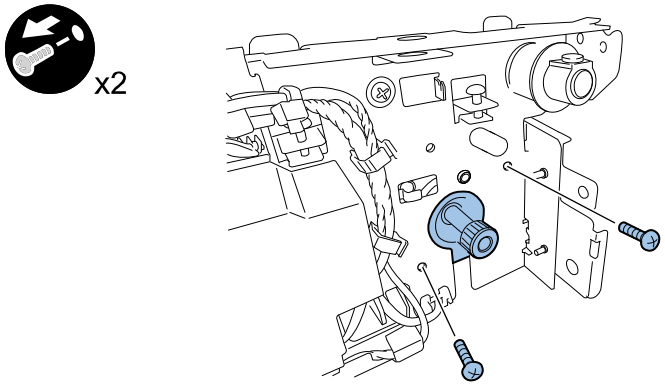

Removing Valve Motor

1) Remove Upper Cover Unit. (Refer to ch. "Removing Upper Cover Unit".)

2) Remove Valve Unit Cover.

   - 1 screw

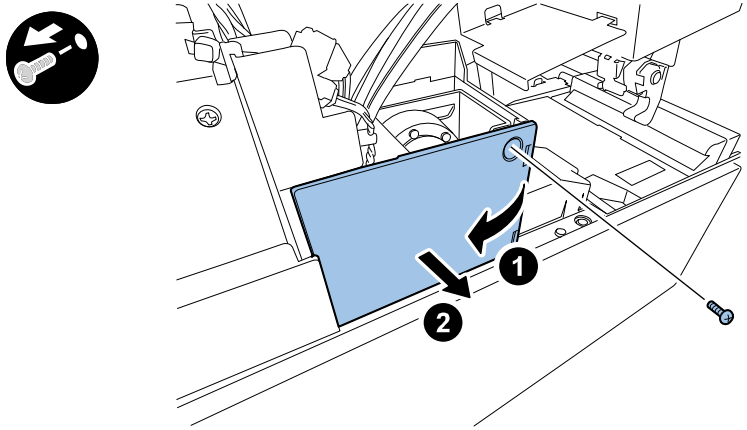

3) Remove a connector.

   - 1 connector
   - 2 clamps

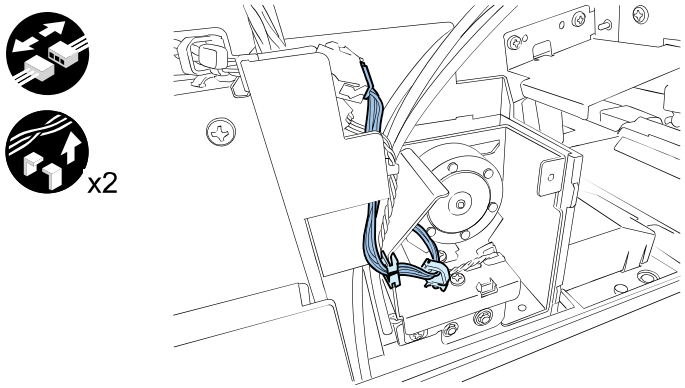

4) Remove Valve Motor.

   - 2 screws

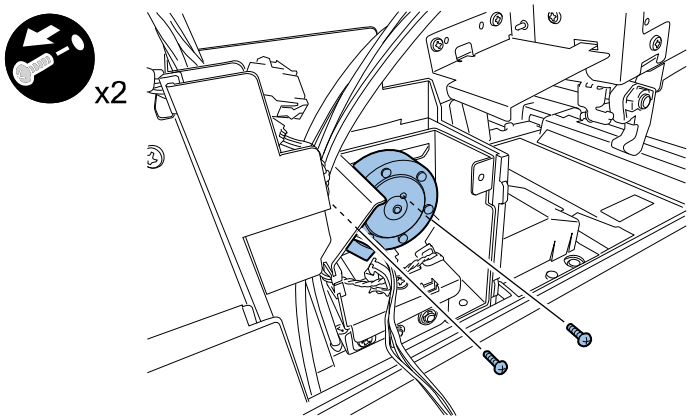

Fans

Removing Paper Suction Fan

1) Remove Transport Unit. (Refer to ch. "Removing Transport Unit".)

2) Remove a connector.

   - 1 connector

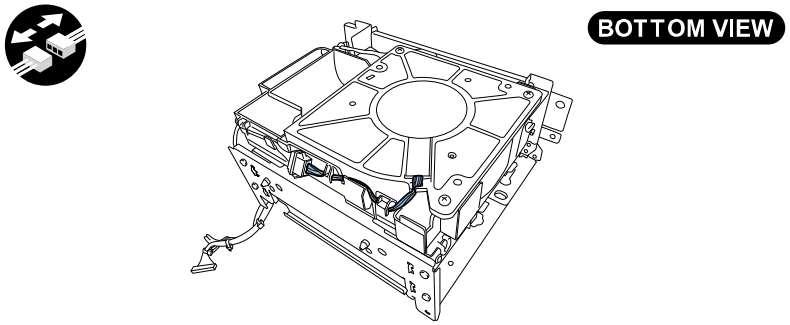

3) Remove Paper Suction Fan.

   - 3 screws

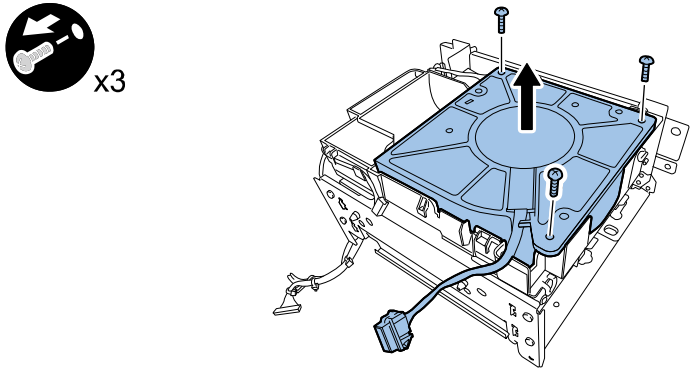

Removing Power Supply Fan

1) Remove Power Supply Unit from Printer. (Refer to ch. "Removing DC Power Supply PCB".)

2) Remove screws and Harness from Saddle.

   - 3 screws
   - 1 clamp

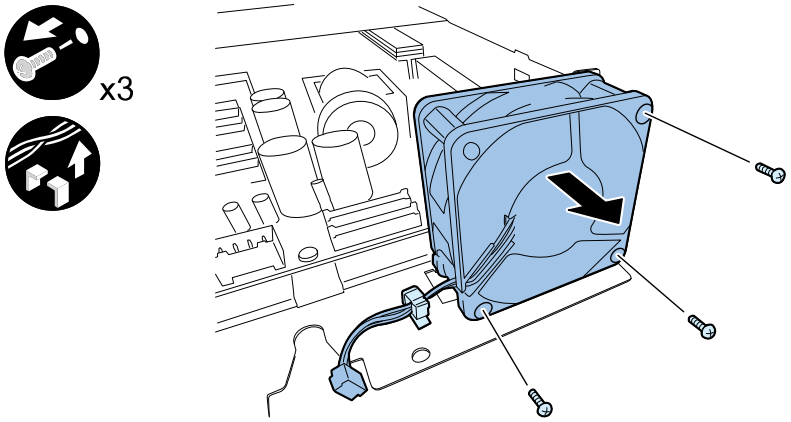

Sensors

Removing Lower Cover Unit

1) Remove Paper Guide Unit. (Refer to ch. "Removing Paper Guide Unit".)

2) Remove connectors and harness from a clamp.

   - 3 connectors
   - 1 clamp

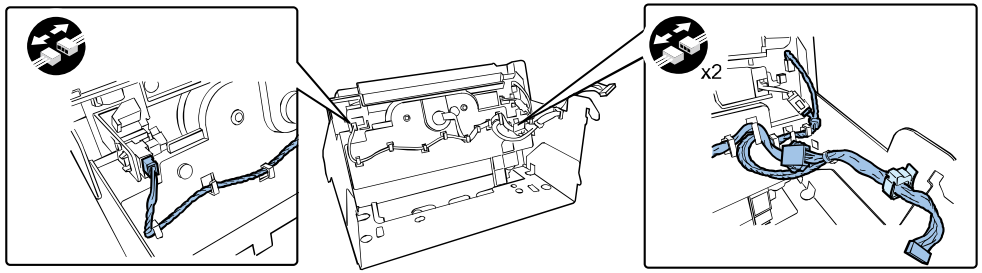

3) Remove Lower Cover Unit.

   - 2 screws

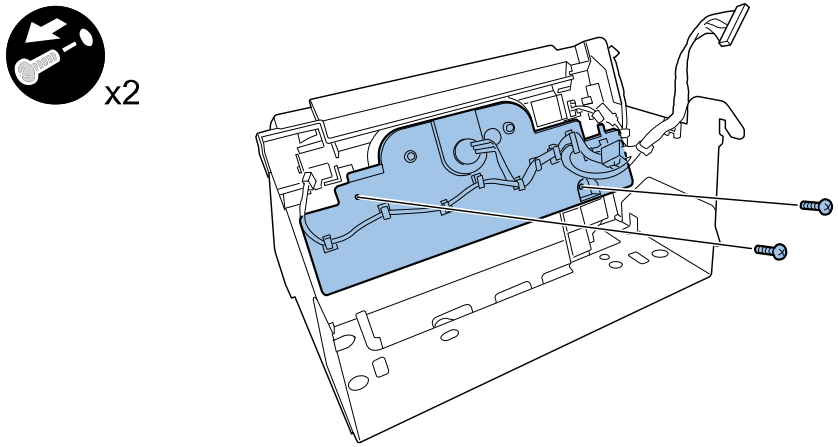

NOTE:
Match the phase of Gear and Volume Gear when installing Lower Cover Unit.

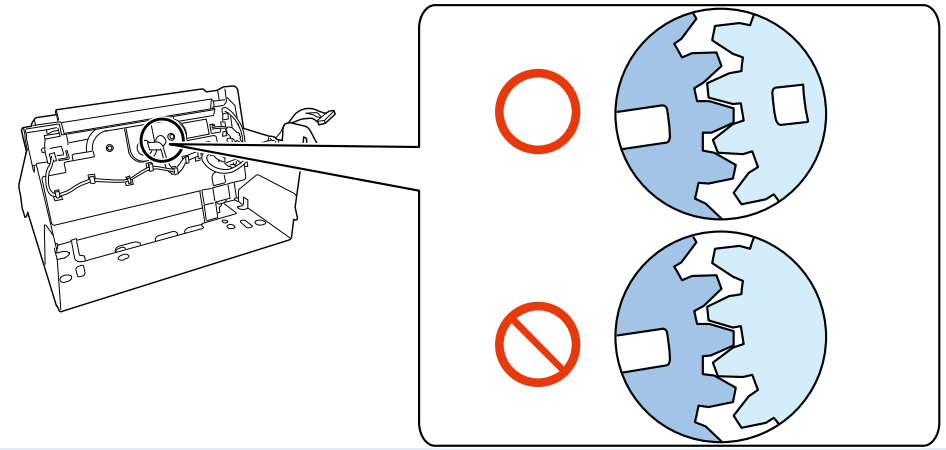

<Outline of Work After Lower Cover Unit Replacement>
Main operation after Lower Cover Unit replacement is shown below.
• Perform Paper Guide Position Adjustment

Removing Trailing Edge Sensor

1) Remove Paper Guide Unit. ("Removing Paper Guide Unit"(page 4-15).)

2) Remove a connector.

- 1 connector

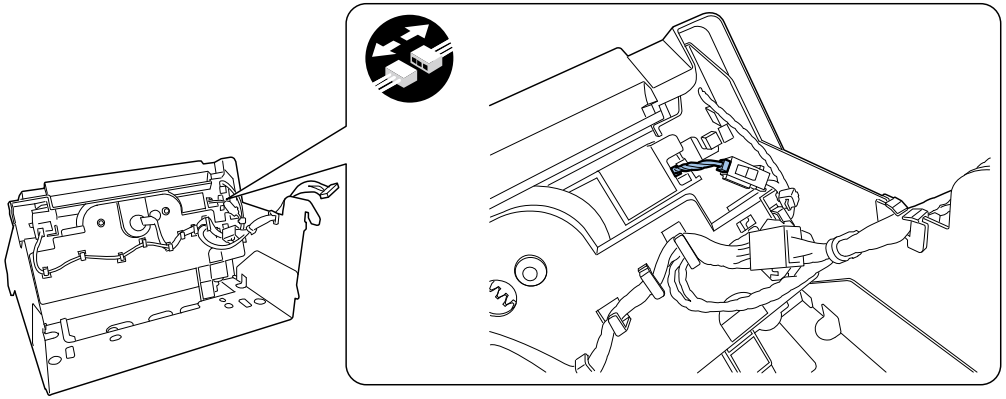

3) Remove screws securing Side Guide.

- 1 screw

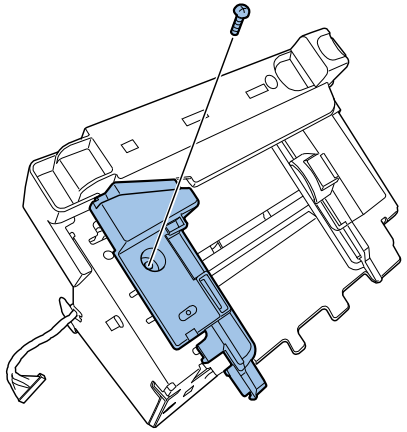

CAUTION:
Install Side Guide in the correct position as shown in the figure.

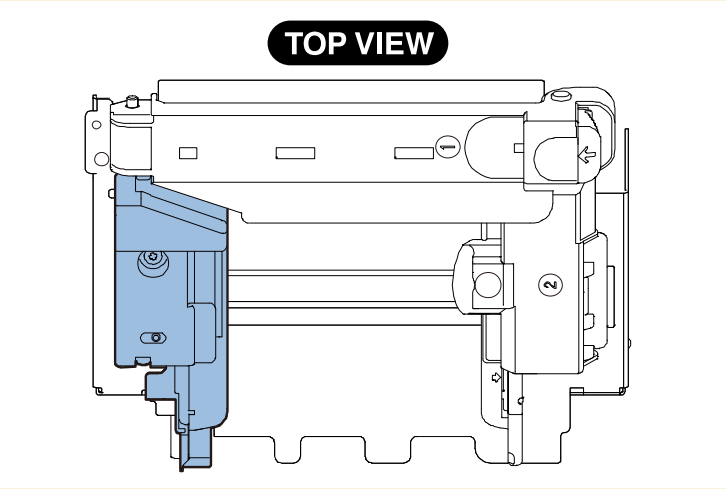

4) Open Paper Retainer and remove Side Guide.

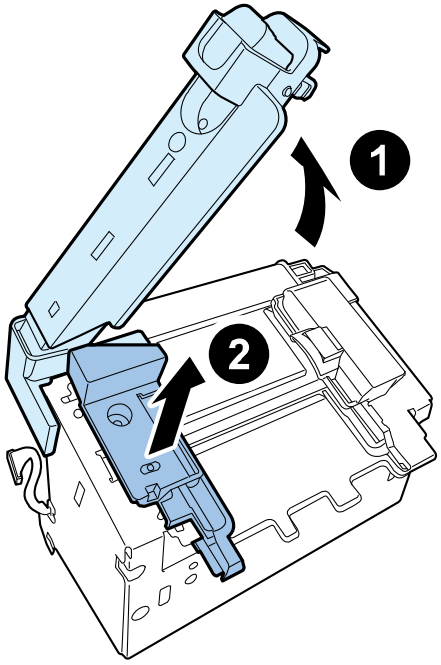

5) Remove Side Guide Upper Cover.

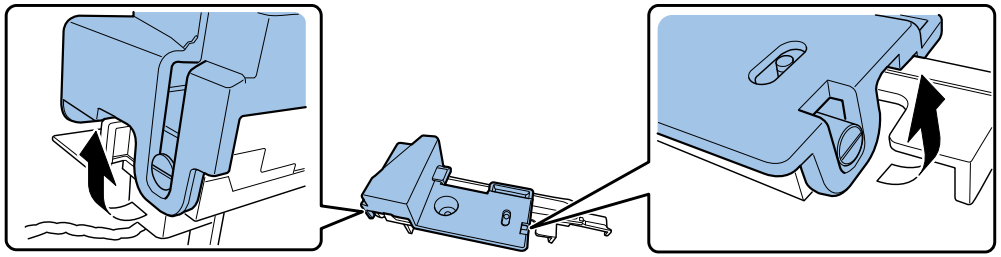

6) Remove Trailing Edge Sensor.

- 1 screw

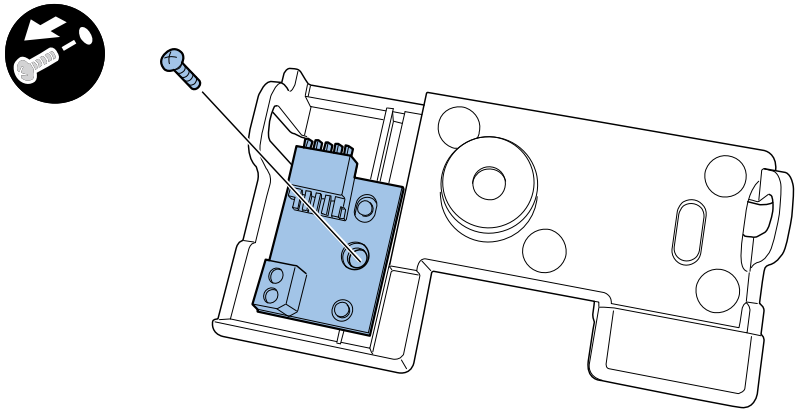

Removing Upper TOF Sensor PCB

1) Remove Transport Unit. (Refer to ch. "Removing Transport Unit".)

2) Remove Sensor Upper Cover.

   - 2 screws

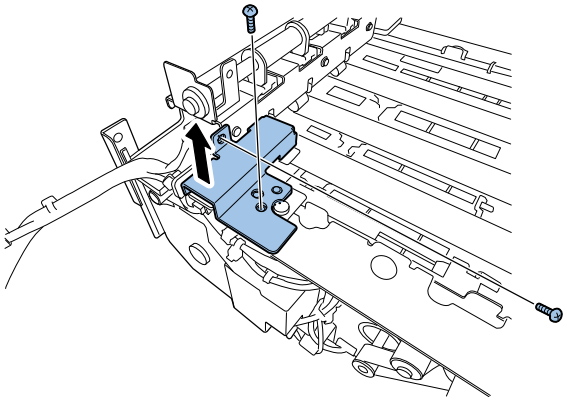

3) Remove a connector.

   - 1 connector

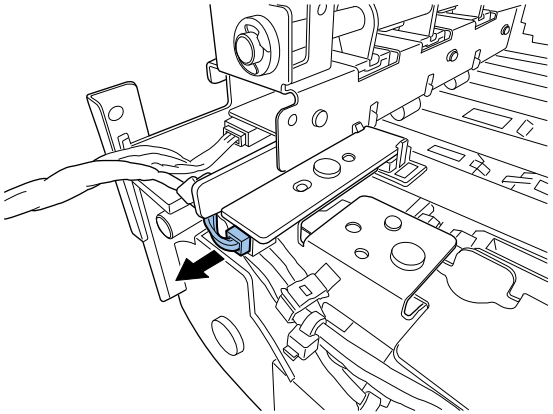

4) Remove Upper TOF Sensor PCB.

   - 1 screw

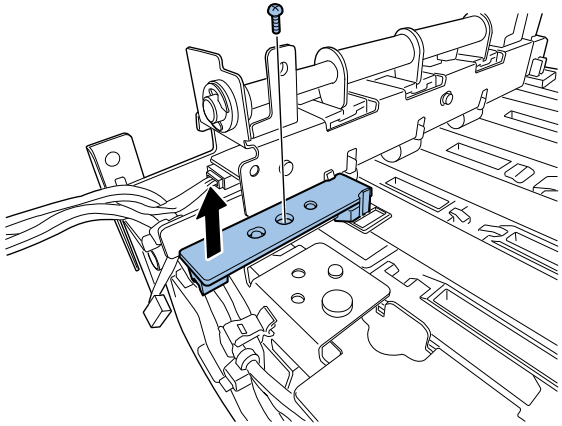

5) Remove sensor cover.

   - 2 claws

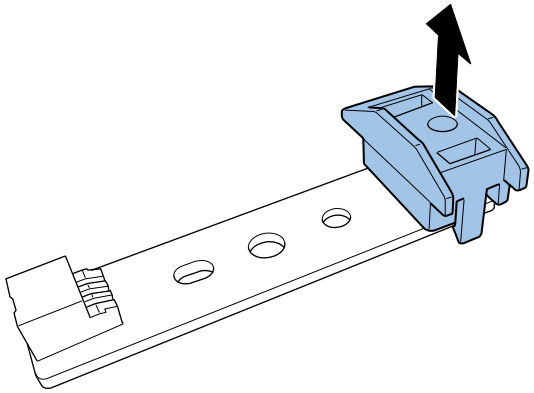

Removing Paper Sensor

1) Remove Transport Unit. (Refer to ch. "Removing Transport Unit".)

2) Remove Sensor Upper Cover.

   - 2 screws

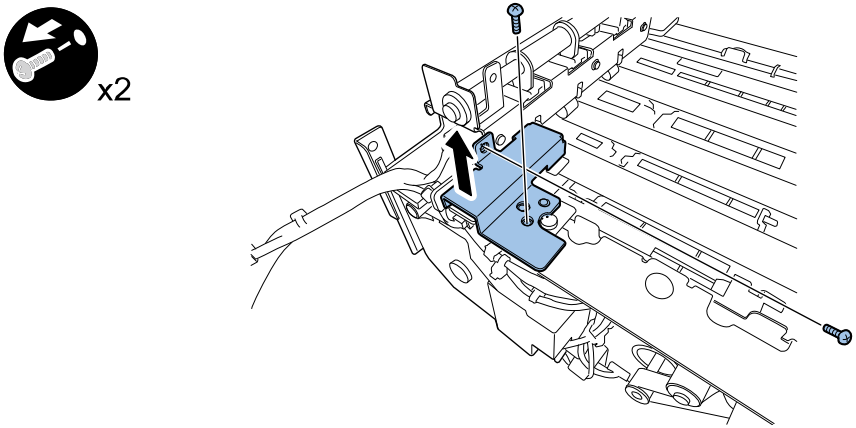

3) Remove screws securing Pinch Roller Unit.

   - 2 screws

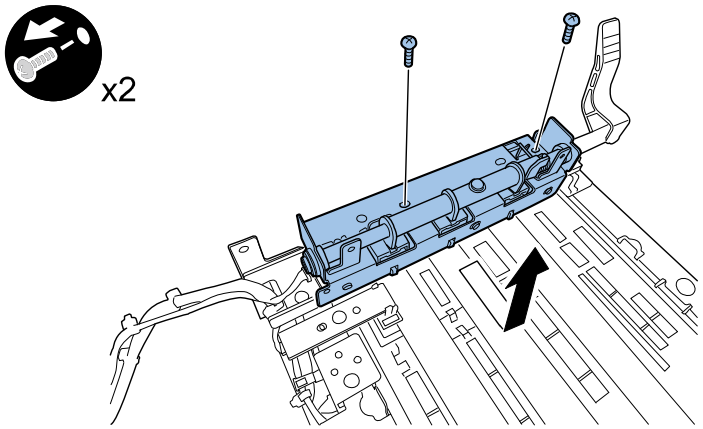

4) Remove a connector.

   - 1 connector

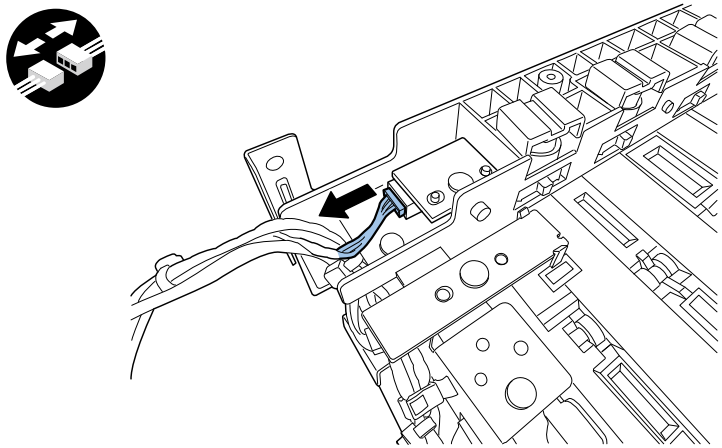

5) Remove Paper Sensor.

   - 1 screw

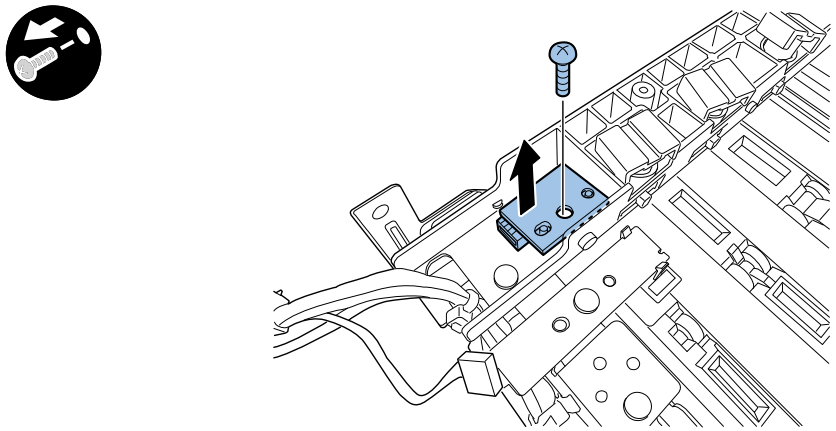

Removing Encoder Sensor

1) Remove Transport Unit. (Refer to ch. "Removing Transport Unit".)

2) Remove Sensor Upper Cover.

- 2 screws

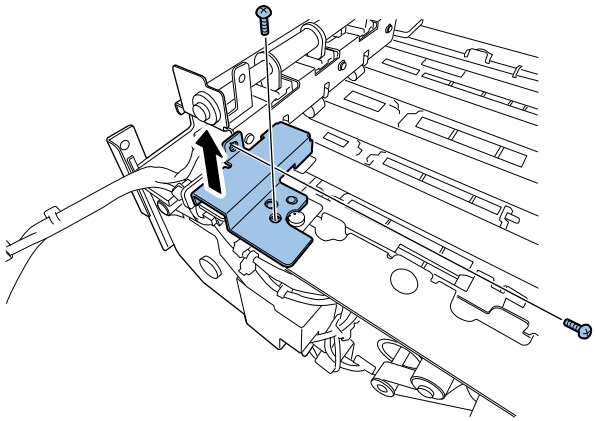

3) Remove connectors.

- 3 connectors
- 3 clamps

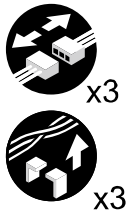

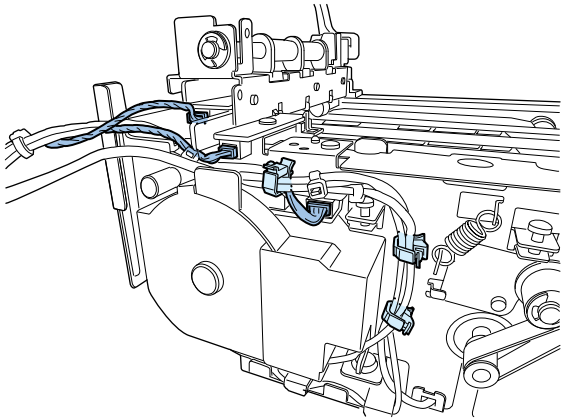

4) Remove Encoder Cover.

- 1 screw

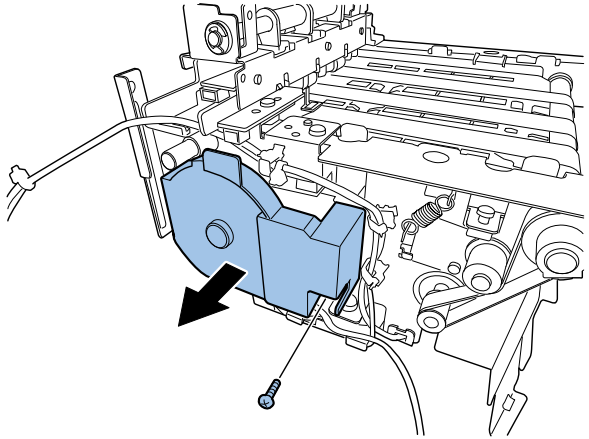

5) Remove connector and Encoder Sensor.

- 2 screws
- 1 connector

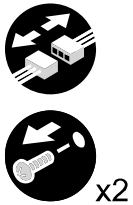

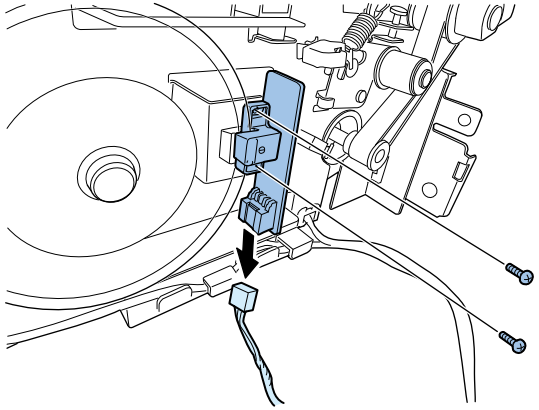

Removing Lower TOF Sensor PCB

1) Remove Transport Unit. (Refer to ch. "Removing Transport Unit".)

2) Remove Encoder Sensor. (Refer to ch. "Removing Encoder Sensor".)

3) Remove Encoder.

   - 1 connector

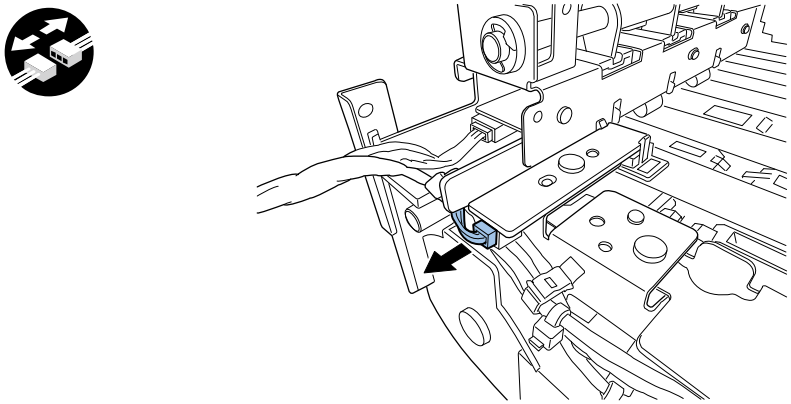

NOTE:
Rotate Transport Belt so that screw is positioned as shown in figure, when removing Encoder.

CAUTION:
Do not damage Encoder when removing it.

4) Remove Harness.

   - 1 clamp

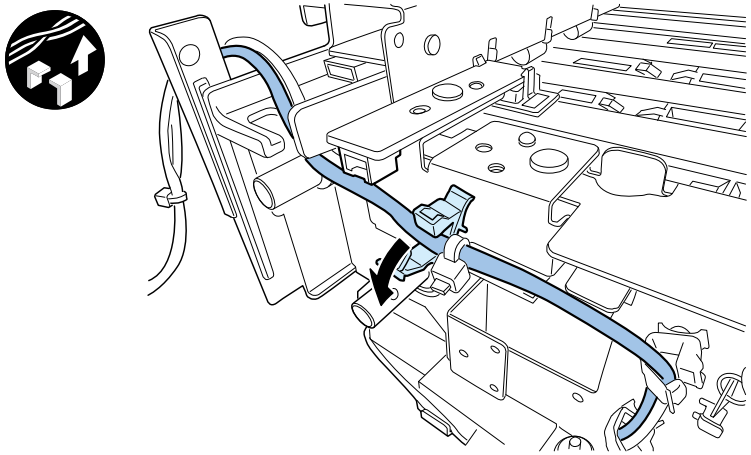

5) Remove PCB Unit.

   - 1 screw

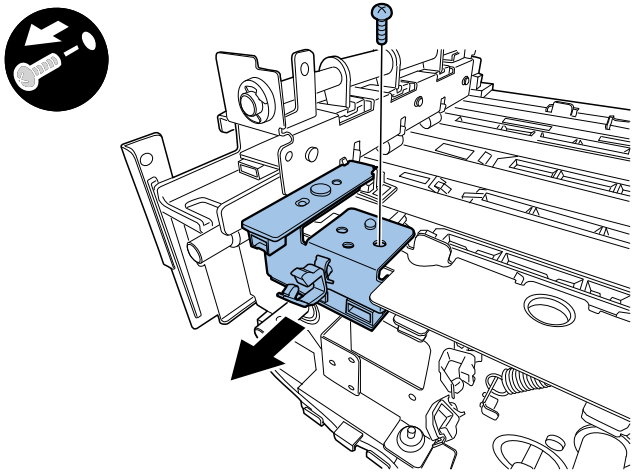

6) Remove Lower TOF Sensor.

- 1 screw

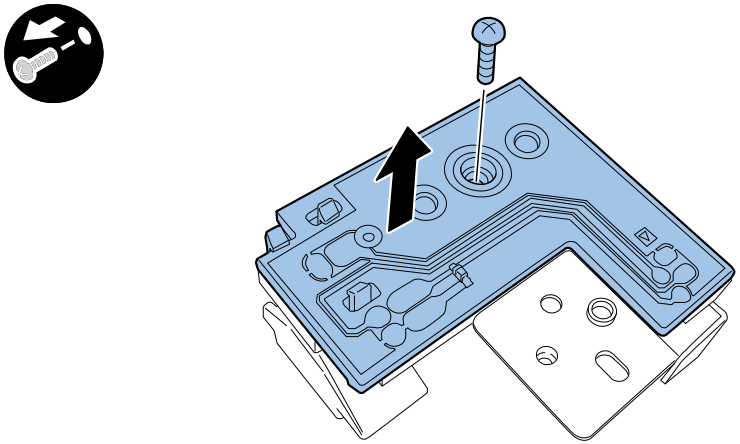

Removing Remaining Ink Sensor

1) Remove Ink Tank Holder Unit. (Refer to ch. "Removing Ink Tank Holder Unit".)

2) Remove Duct.

- 2 screws

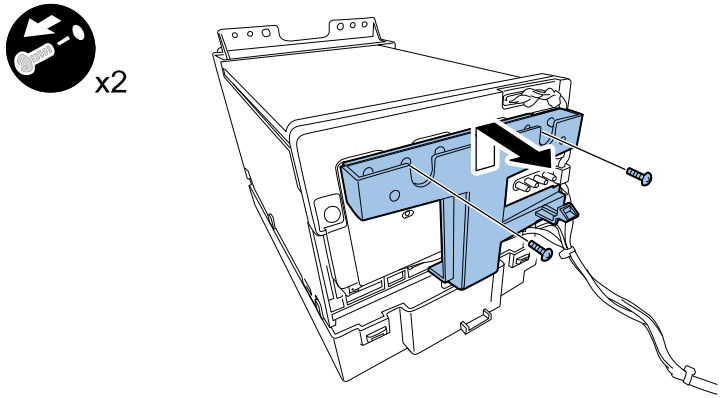

3) Remove Harness Connector and Harness from Saddle.

- 4 connectors
- 1 clamp

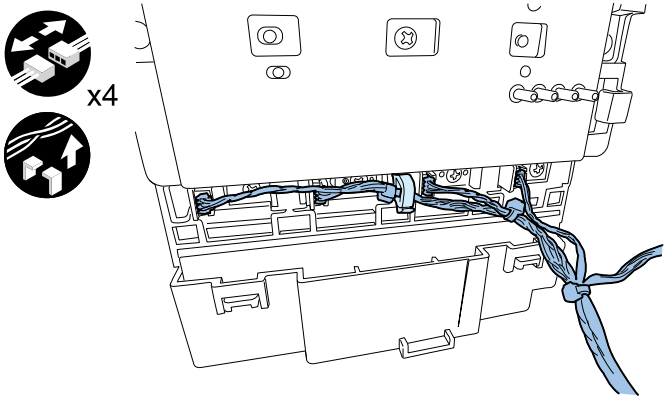

4) Remove Remaining Ink Sensor.

- 1 screw

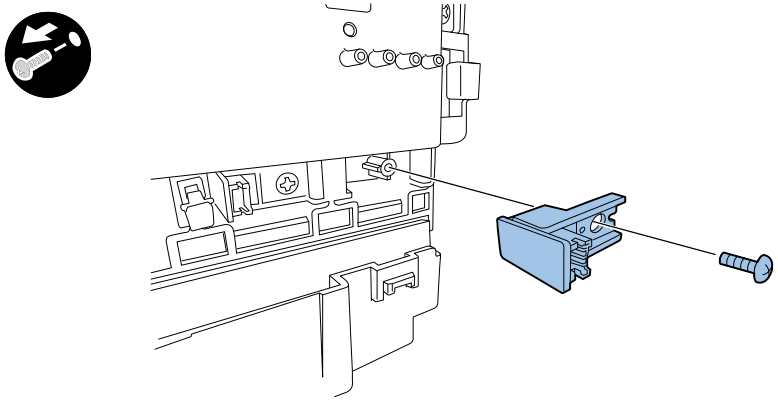

Removing Valve Sensor

1) Remove Valve Motor. (Refer to ch. "Removing Valve Motor".)

2) Remove Sensor Plate.

- 3 screws

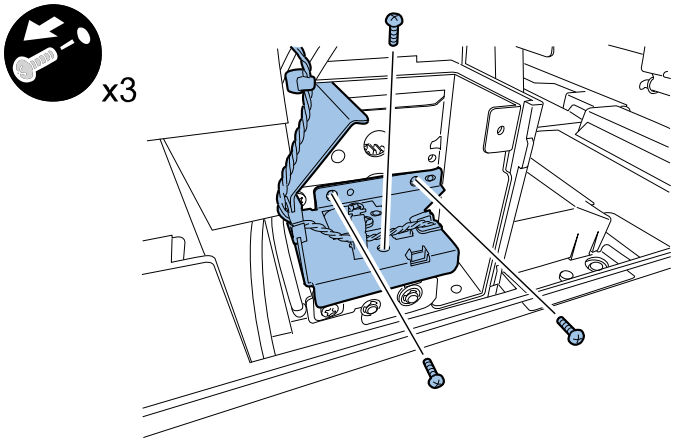

3) Remove connector and Valve sensor.

- 1 connector

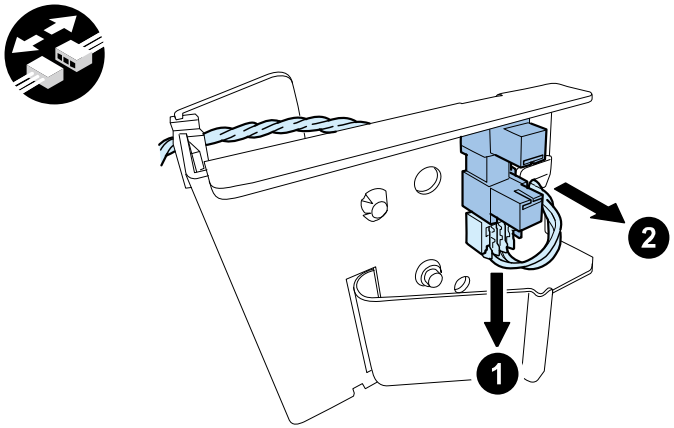

Removing Electrode Plate

1) Remove Printer Controller PCB.("Removing Printer Controller PCB"(page 4-48).)

2) Remove Harness.

   - 9 clamps

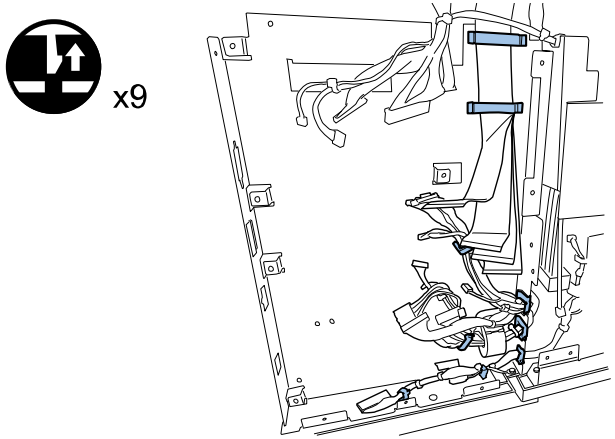

3) Remove PCB Stay.

   - 4 screws

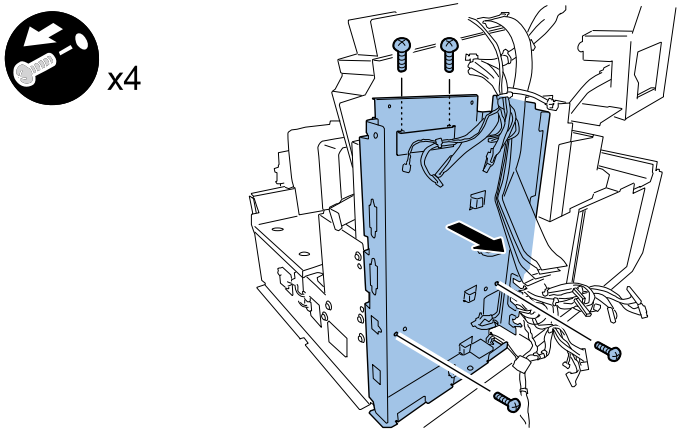

4) Remove Electrode Plate.

   - 2 screws

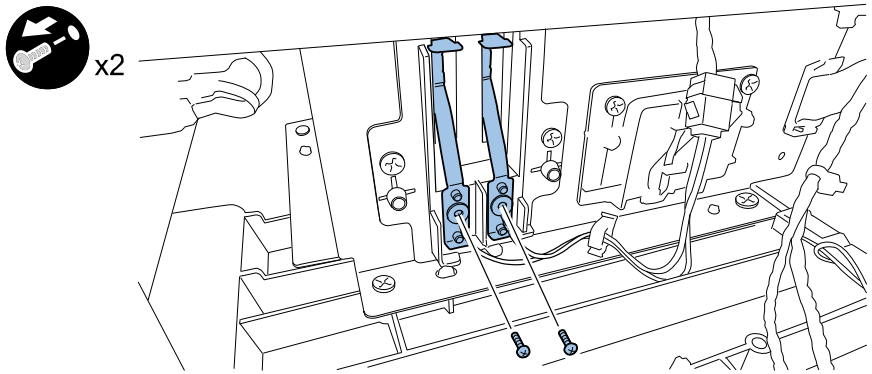

Switches and Others

Removing Upper Unit Safety Switch

1) Remove Roll Drive Unit. (Refer to ch. "Removing Roll Drive Unit".)
2) Remove Paper Guide Unit.(Refer to ch. "Removing Paper Guide Unit".)
3) Remove a connector and Switch from claws.
   - 1 connector
   - 2 claws

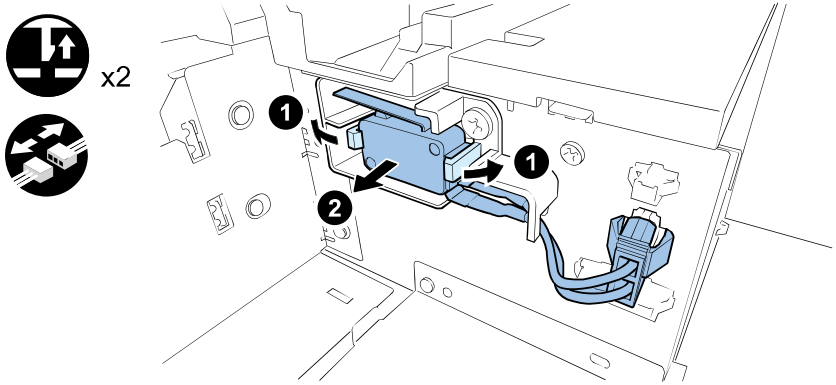

Removing Ink Tank Lever

1) Open Ink Tank Lever.

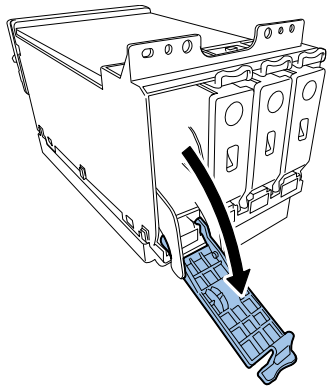

2) Remove Boss of Ink Tank Lever.

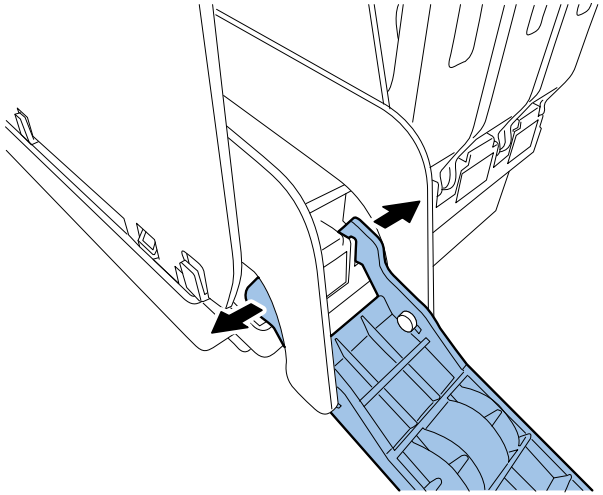

3) Rotate Ink Tank Lever to open Ejector.

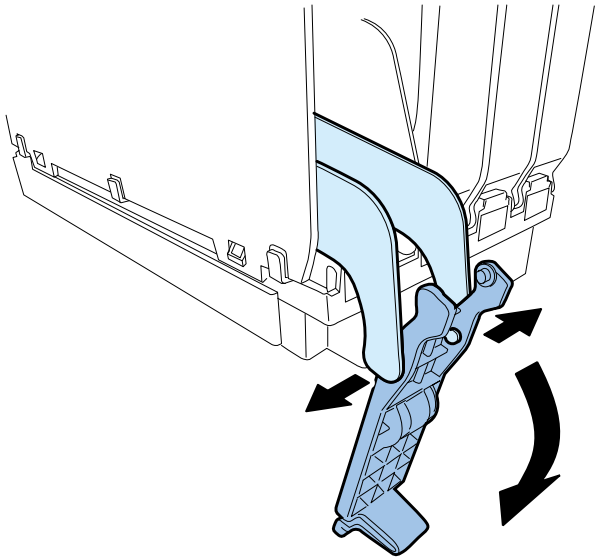

Cleaning Procedure

Cleaning Procedure of Printhead Face

Execute this cleaning in the case white streak can not be recovered by Strong Cleaning.

NOTE:
The following procedure is for cleaning with clear ink. For the cleaning procedure when clear ink is not available, see ch. "Cleaning Procedure of Printhead Face".

1) Print Nozzle Check Pattern using Service Utility.
   - Service Utility > Test Print/Adjustment > Nozzle Check pattern
2) Move Printhead to head cleaning position (print position) using Service Utility.
   - Service Utility > Troubleshooting > Printhead Cleaning Position

CAUTION:
Do not keep Printhead at head cleaning position for a long time.

NOTE:
It takes 5 seconds to move Printhead to head cleaning position.

3) Open Upper Unit.
4) Lightly apply clear ink to the cleaning stick.
5) Gently press the tip of the cleaning stick against a dust-free towel, and gently wipe off the clear ink from the surface of the tip.

CAUTION:
- Do not allow dust to adhere to the tip of the cleaning stick.
- Cleaning the nozzle surface of the Printhead using a cleaning stick with a lot of clear ink may cause the clear ink to drip onto the transport area.
- Do not press the tip of the cleaning stick too hard against the dust-free towel. If you do, the towel will become fluffy, and lint may adhere to the tip of the cleaning stick.
- Do not use a used cleaning stick for cleaning the nozzle surface of the Printhead of another color.

6) Using the cleaning stick, clean the nozzle surface of the Printhead that is causing white streaks by wiping from left o right two or three times.

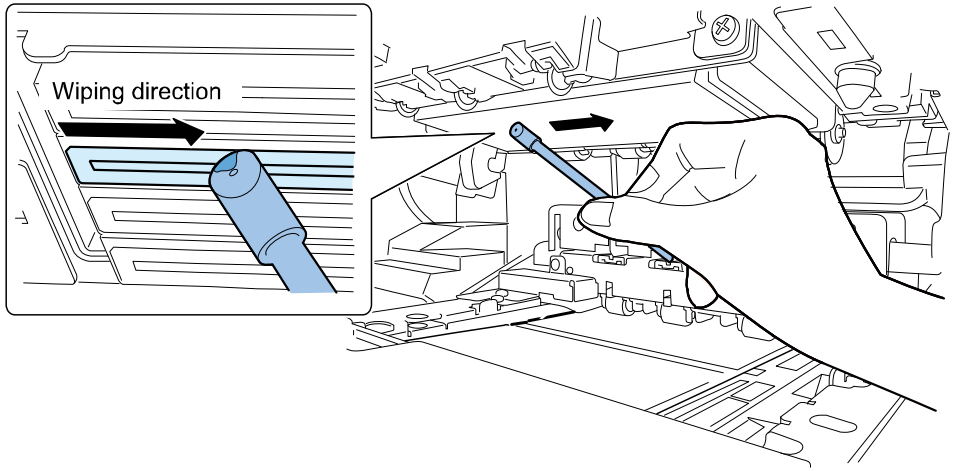

CAUTION:

- Do not touch cut section of cleaning stick on face of Printhead.
- Touching force of cleaning stick to the face of Printhead is that tip of cleaning stick bends lightly. Do not wipe the face f Printhead hard, wiping hard might be cause of harm to the face of printhead.
- Do not touch the face of Printhead with hand. A failure can result.

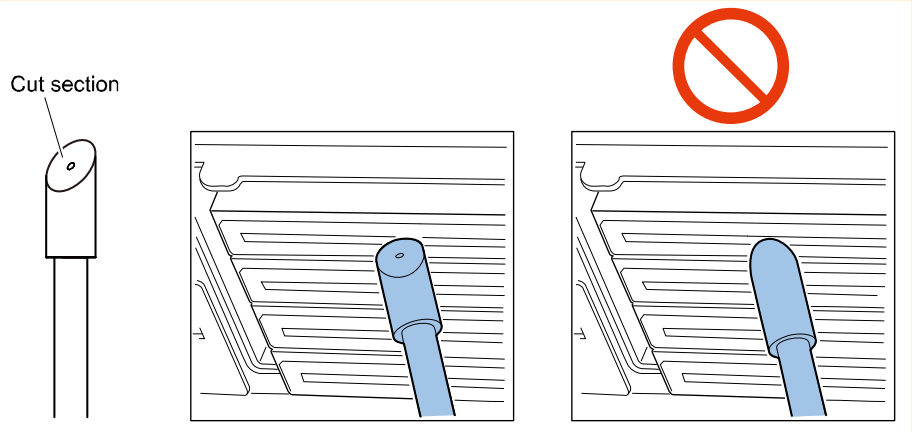

7) Close Upper Unit.

8) Print Nozzle Check Pattern again.

   - Service Utility > Test Print/Adjustment > Nozzle Check pattern

9) Check for white streaks in the solid image areas.

Cleaning Procedure of TOF Sensor

1) Open Upper Unit.

2) Pass damp, wrung out Cleaning Towel (98-0790164-00LF) between Upper TOF Sensor and Lower TOF Sensor to remove paper dust from the top surface of Platen Protection Lens.

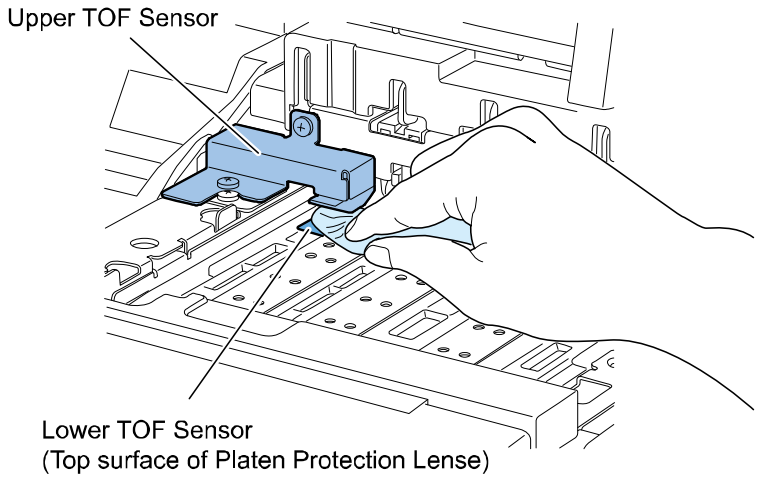

5. Troubleshooting

Initial Check

Initial Check Items

Checking the Installation Environment

Check whether the installation place meets the following requirements:

1) The power supply voltage must be the rated voltage from -15% to +10% and the power supply frequency must be the rated frequency ±2 Hz.
2) The printer must be held horizontal.
3) The ambient temperature must be held at 15 to 30 degrees and the humidity at 10 to 80%.
4) Avoid the place where both the temperature and humidity are high (near the faucet, boiler, or humidifier), the temperature is extremely low, the temperature changes greatly. Also avoid the palace near fire.
5) Avoid dusty locations.
6) Avoid the place exposed to direct sunlight. If it is inevitable to install the printer in such a place, instruct the customer to hang curtains.
7) The room must be well-ventilated.

Checking the Paper

1) Check whether the dedicated paper is used.
2) Check whether the paper is moist. Unpack new paper, load it in Printer, and check for printing.

Checking Settings

Check whether the settings made for the printer are suitable for the paper used and other requirements, specifically, in terms of the following:

1) Paper setting Paper size (length and width)
2) Printing condition Number of prints

Dew Condensation

If Printer is quickly brought from a cold warehouse to a warm room for installation in winter, dew condensation occurs in every component of Printer, causing various problems.
If dew condensation occurs, wipe moisture off the components, leave Printer standing for a while until Printer temperature rises to the room temperature, and turn on Printer. When the packed Printer has been brought from the extremely cold warehouse to the warm installation place, leave it standing for 1 to 2 hours before unpacking Printer.

Image Defect Recovery

Outline

The following figure shows an image defect sample in a test print. This sample uses matcoated paper.
If an image defect occurs, produce a test print, determine which of the following images matches your test print, and take the appropriate action.

NOTE:
Print a nozzle check pattern, and check Printhead that is not discharging and then non-discharge condition.
If regularity is seen in the non-discharge condition of the nozzle check pattern or if a void (area where there is absolutely no discharge) occurs, see ch. “Void”.

- Non-discharge with regularity

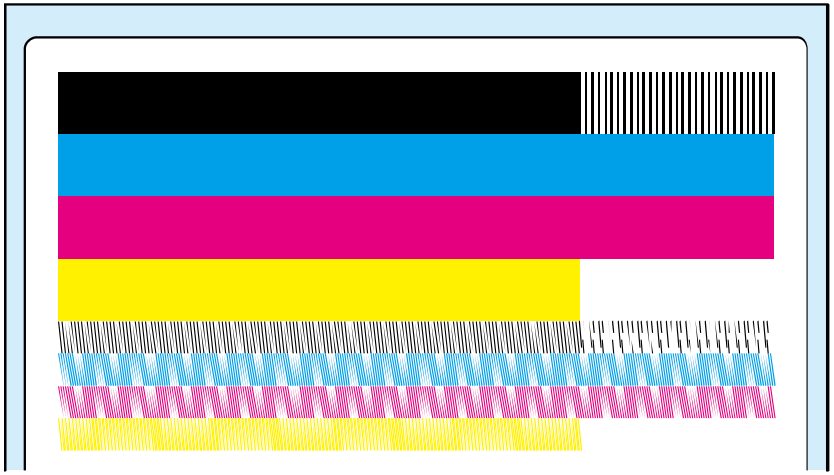

- Void

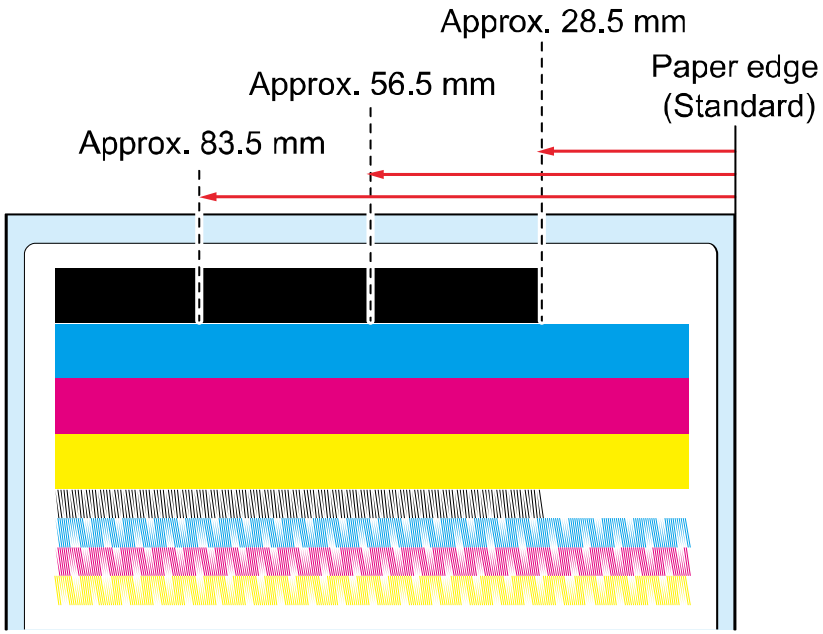

White Streak Several Millimeters in Length (Non-Discharge)/Faint Image (Distortion)

[1] White Streak (Non-Discharge): State in which ink drops cannot be discharged from Printhead nozzles due to dust, bubble, thickened ink, wetting, etc. around Printhead nozzle.

[2] Faint Image (Distortion): State in which ink drops cannot be discharged from Printhead nozzles due to dust, bubble, thickened ink, wetting, etc. around Printhead nozzle or state in which condensed ink film is formed on the surfaces of Printhead nozzles, and as a result ink drops are not ejected straight.

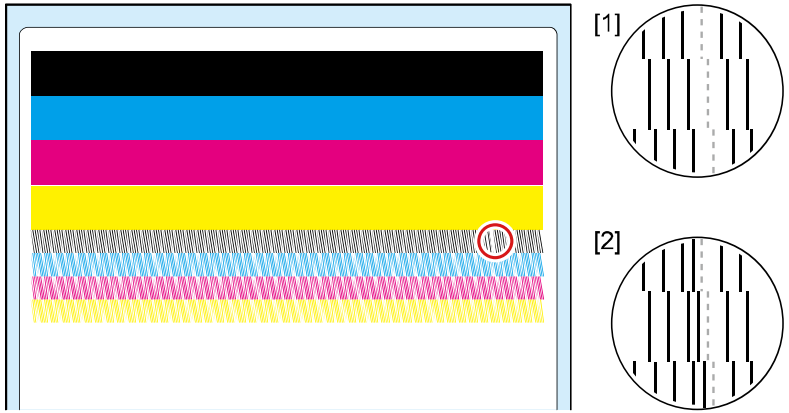

<Remedy>

Procedure	Check Item	Remedy
1	Carry out Strong Cleaning, and then check that the defect has been recovered.	Yes: Carry out Strong Cleaning 2 or 3 times. No: Next.
2	Wipe Printhead face with cleaning stick, and then check that the defect has been recovered. CAUTION: If Printhead exposure time exceeds about 1 minute, also perform Strong Cleaning.	Yes: Repeat Strong Cleaning and Printhead Face Cleaning. No: Next.
3	Blade, cap, or cap base is contaminated with dust or foreign matter.	Yes: After removing foreign matter with cleaning stick, carry out Strong Cleaning. No: Next.
4	Blade, cap, or cap base is scratched or deformed.	Yes: After replacing Purge Unit, carry out Strong Cleaning. No: Next.
5	Replace Printhead.	End.

Irregular Non-Discharge of Multiple Heads/Irregular Non-Discharge of a Single Color

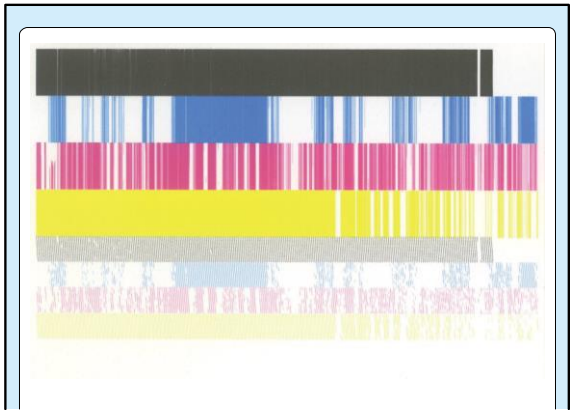

<Remedy>

Procedure	Check Item	Remedy
1	Carry out Strong Cleaning, and then check that the defect has been recovered.	Yes: Execute "Preparation before transportation" to drain ink, and then turn on the power to load ink. No: Next.
2	Carry out Strong Cleaning, and then check that the defect has been recovered.	Yes: Carry out Strong Cleaning 2 or 3 times. No: Next.
3	Wipe Printhead face with cleaning stick, and then check that the defect has been recovered. CAUTION: If Printhead exposure time exceeds about 1 minute, also perform Strong Cleaning.	Yes: Repeat Strong Cleaning and Printhead Face Cleaning. No: Next.
4	Blade, cap, or cap base is contaminated with dust or foreign matter.	Yes: After removing foreign matter with cleaning stick, carry out Strong Cleaning. No: Next.
5	Blade, cap, or cap base is scratched or deformed.	Yes: After replacing Purge Unit, carry out Strong Cleaning. No: Next.
6	Replace Printhead, and then check that the defect has been recovered.	Yes: End. No: Next (includes situations in which ink loading does not finish normally)
7	Replace Pump Unit, and then check that the defect has been recovered.	Yes: End. No: Next.
8	Replace Print Module, and then check that the defect has been recovered.	Yes: End. No: Next.
9	Replace Printer Controller PCB.	End

Void

State in which a void is generated due to defective parts of Printhead, Flexible Cable, PCB, etc. or bad connection.

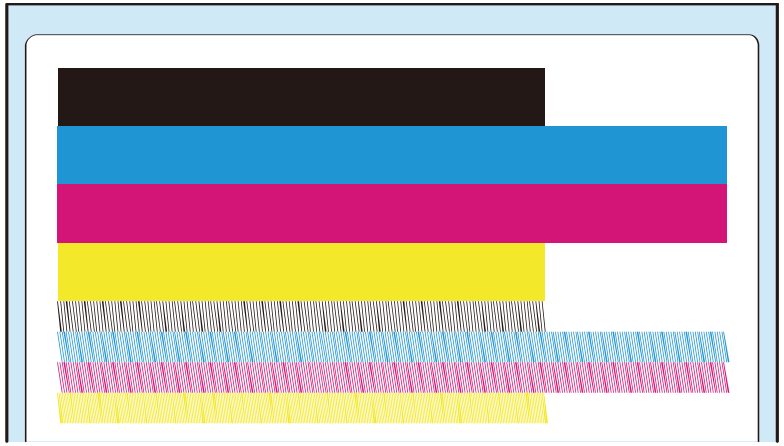

<Remedy>

Procedure	Check Item	Remedy
1	The connector of Flexible Cable is not connected securely.	Yes: Connect it properly. No: Next.
2	Flexible Cable has a defect such as disconnection, crack, or ink adhesion.	Yes: Replace Flexible Cable.
3	Reinsert Printhead.	Yes: End. No: Next.
4	Replace Printhead Relay PCB, and then check that the defect has been recovered.	Yes: End. No: Next.
5	Replace Printhead, and then check that the defect has been recovered.	Yes: End. No: Next.
6	Replace Printer Controller PCB, and then check that the defect has been recovered.	Yes: End. No: Next.
7	Replace Print Module.	End

Abnormal Discharge

State in which ink is ejected to an area having no image data due to defective parts of Printhead, Flexible Cable, PCB, etc. or bad connection.

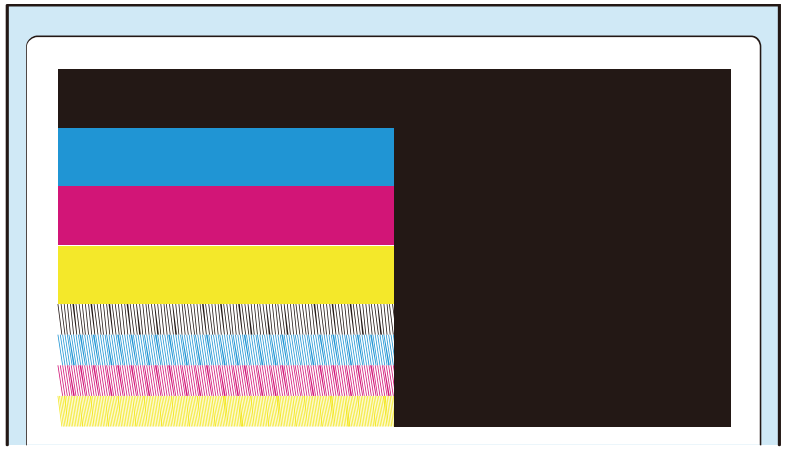

<Remedy>

Procedure	Check Item	Remedy
1	Interface Cable is not connected securely.	Yes: Connect it properly. No: Next.
2	The cable has a defect such as disconnection or crack.	Yes: Replace the Cable.
3	Any setting or stored print data is erroneous.	Yes: Correct the setting or print data.. No: Next.
4	Reinstall printer driver, and then check that the defect has been recovered.	Yes: End. No: Next.
5	Replace Printer Controller PCB.	End

Uneven Image (Cross Feeding Direction)

State in which stripes differing in thickness are generated in the longitudinal direction of Printhead.

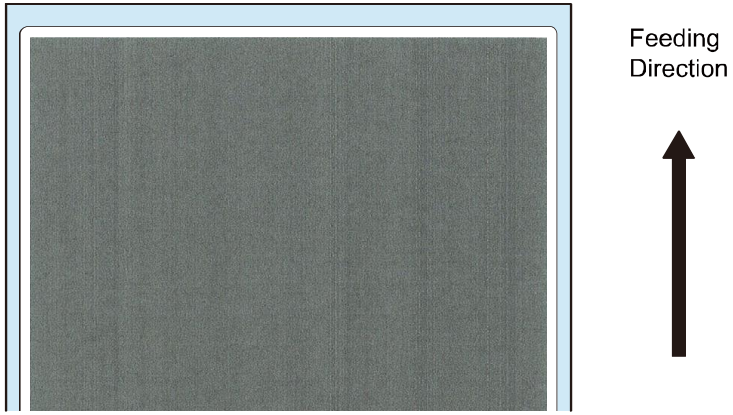

<Remedy>

Procedure	Check Item	Remedy
1	Carry out Light Cleaning, Medium Cleaning, and Strong Cleaning 2 or 3 times for each cleaning, and then check that the defect has been recovered.	Yes: End. No: Next.
2	Carry out Prevent Unevenness, and then check that the defect has been recovered.	Yes: End. No: Next.
3	Wipe Printhead face with cleaning stick, and then check that the defect has been recovered.	Yes: End. No: Next.
4	Replace Printhead, and then check that the defect has been recovered.	Yes: End. No: Next.
5	Replace Printer Controller PCB.	Yes: End. No: Next.
6	Replace Print Module.	End

Uneven Image (Feeding Direction)

State in which stripes differing in thickness are generated in the transport direction.

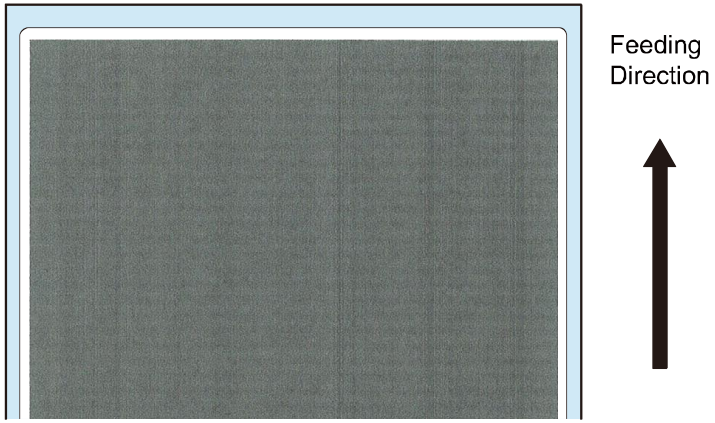

<Remedy>

Procedure	Check Item	Remedy
1	Carry out registration adjustment, and then check that the defect has been recovered.	Yes: End. No: Next.
2	Printhead Unit is not assembled properly	Yes: Reassemble it properly. No: Next.
3	Printhead Unit is not installed properly.	Yes: Reinstall it properly. No: Next.
4	Pinch Roller Unit or Spur Unit is not installed properly.	Yes: Reinstall it properly. No: Next.
5	Pinch Roller or Spur does not rotate smoothly.	Yes: Replace Pinch Roller Unit or Spur Unit. No: Next.
6	Transport Belt is not located at the correct position.	Yes: Move Transport Belt back to the correct position.
7	Replace Transport Motor, and then check that the defect has been recovered.	Yes: End. No: Next.
8	Replace Transport Unit, and then check that the defect has been recovered.	Yes: End. No: Next.
9	Replace Printhead, and then check that the defect has been recovered.	Yes: End. No: Next.
10	Replace Printer Controller PCB, and then check that the defect has been recovered.	Yes: End. No: Next.
11	Replace Print Module.	End

Relative Misregistration in Colors in X or Y Direction)

State in which registration positions of individual colors are deviated, and as a result colors look shifted.

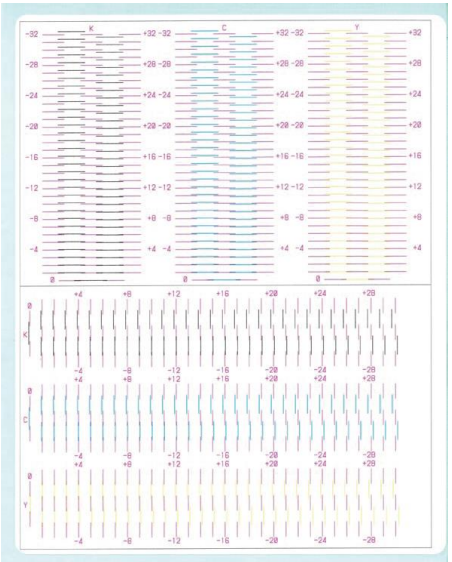

<Remedy>

Procedure	Check Item	Remedy
1	Carry out Registration Adjustment, and then check that the defect has been recovered.	Yes: End. No: Next.
2	Printhead Unit is not assembled properly	Yes: Reassemble it properly. No: Next.
3	Printhead Unit is not installed properly.	Yes: Reinstall it properly. No: Next.
4	Pinch Roller Unit or Spur Unit is not installed properly.	Yes: Reinstall it properly. No: Next.
5	Pinch Roller or Spur does not rotate smoothly.	Yes: Replace Pinch Roller Unit or Spur Unit. No: Next.
6	Transport Belt is not located at the correct position.	Yes: Move Transport Belt back to the correct position.
7	Replace Transport Motor, and then check that the defect has been recovered.	Yes: End. No: Next.
8	Replace Transport Unit, and then check that the defect has been recovered.	Yes: End. No: Next.
9	Replace Printhead, and then check that the defect has been recovered.	Yes: End. No: Next.
10	Replace Printer Controller PCB, and then check that the defect has been recovered.	Yes: End. No: Next.
11	Replace Print Module.	End

Misregistration (Leading Edge and Side Edge)

Print image coordinate is not aligned with the paper. The following sample shows the misregistration in side edge.

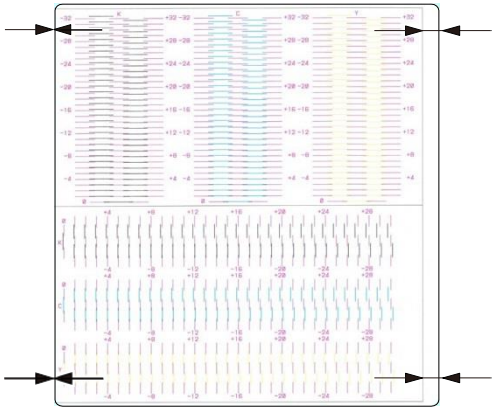

<Remedy>

Procedure	Check Item	Remedy
1	Dedicated paper is not used.	Yes: Replace with dedicated paper. No: Next.
2	Paper is not loaded properly.	Yes: Load paper properly. No: Next.
3	The type and size of paper to be used are not set properly.	Yes: Properly set the type and size of paper to be used. No: Next.
4	Margins are not set to appropriate values.	Yes: Set margins to appropriate values. No: Next.
5	The inter-label gap or TOF mark width is not set to a value suitable for paper to be used.	Yes: Set the inter-label gap or TOF mark width to a value suitable for paper to be used. No: Next.
6	Carry out image position adjustment, and then check that the defect has been recovered.	Yes: End. No: Next.
7	TOF Sensor is contaminated with paper, dust, etc.	Yes: Replace TOF Sensor. No: Next.
8	Connector of TOF Sensor is only inserted half way.	Yes: Connect it properly. No: Next.
9	Replace TOF Sensor.	Yes: End. No: Next.

Paper Skew

State in which an image is printed on a skew in relation to the left and right edges of the print sheet.

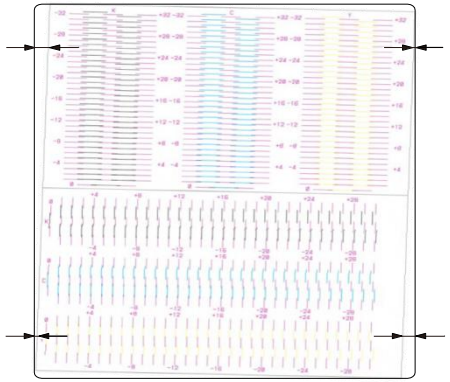

<Remedy>

Procedure	Check Item	Remedy
1	Paper is not loaded properly.	Yes: Load paper properly. No: Next.
2	Roll Drive Unit is not installed properly.	Yes: Reinstall it properly. No: Next.
3	Guide Unit is not installed properly.	Yes: Reinstall it properly. No: Next.
4	Pinch Roller Unit or Spur Unit is not installed properly.	Yes: Reinstall it properly. No: Next.
5	Pinch Roller or Spur does not rotate smoothly.	Yes: Replace Pinch Roller Unit or Spur Unit. No: Next.
6	Transport Belt is not located at the correct position.	Yes: Move Transport Belt back to the correct position. No: Next.
7	Replace Roll Drive Unit, and then check that the defect has been recovered.	Yes: End. No: Next.
8	Carry out Printhead Slant Adjustment, and then check that the defect has been recovered.	Yes: End. No: Next.
9	Replace Transport Unit.	End.

Spur Marks (White Dotted Lines)

State in which pressed Spur marks are made on the print sheet.

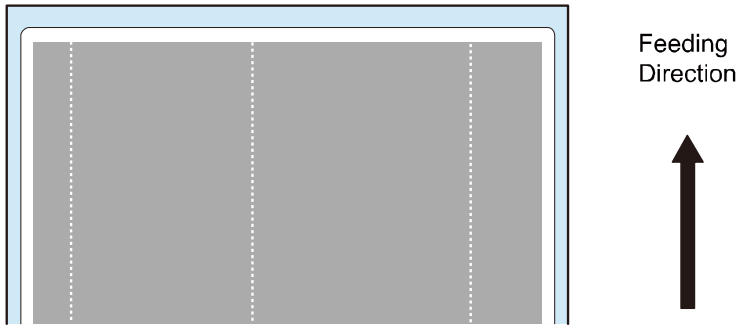

<Remedy>

Procedure	Check Item	Remedy
1	Dedicated paper is not used.	Yes: Replace with dedicated paper. No: Next.
2	Spur Unit is not installed properly.	Yes: Reinstall it properly. No: Next.
3	Spur does not rotate smoothly.	Yes: Replace Spur Unit. No: Next.
4	Transport Belt is not located at the correct position.	Yes: Move Transport Belt back to the correct position. No: Next.
5	Replace Transport Unit.	End.

Spur Marks (Dotted Lines)

State in which ink is transferred to Spur or Spur cleaner due to ink dripping, fixing error, etc. and as a result Spur ink marks are made on the print sheet.

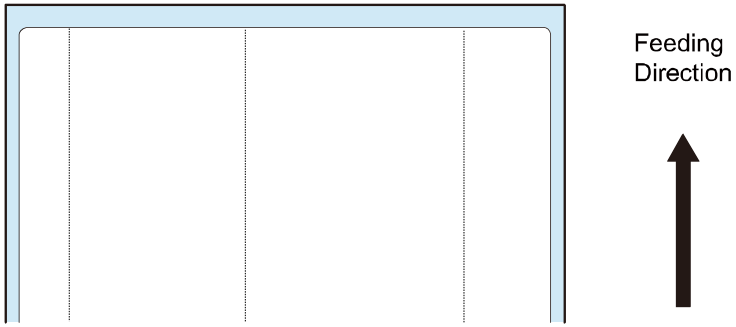

<Remedy>

Procedure	Check Item	Remedy
1	Dedicated paper is not used.	Yes: Replace with dedicated paper. No: Next.
2	Clean Spur and Spur Cleaner, and then check that the defect has been recovered.	Yes: End. No: Next.
3	Replace Spur Unit.	End.

Ink Smearing (Due to Printhead Crash)

State in which the print sheet touches Printhead and is stained with ink.

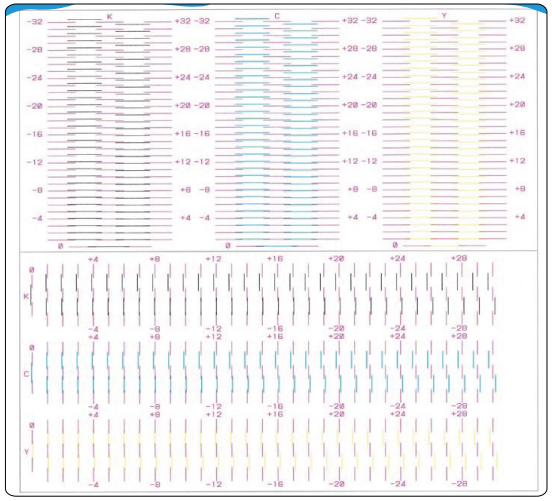

<Remedy>

Procedure	Check Item	Remedy
1	Paper leading edge is folded or curled.	Yes: Correct the fold or curl. No: Next.
2	Pinch Roller Unit or Spur Unit is not installed properly.	Yes: Reinstall it properly. No: Next.
3	Pinch Roller or Spur does not rotate smoothly.	Yes: Replace Pinch Roller Unit or Spur Unit. No: Next.
4	Printhead height adjustment value and Paper Suction Fan adjustment value are not set.	Yes: Set Printhead height adjustment value and Paper Suction Fan adjustment value. No: Next.
5	Carry out Level1 in Prevent Uunevenness Mode, and then check that the defect has been recovered.	Yes: End. No: Next.
6	Carry out Level2 in Prevent Uunevenness Mode, and then check that the defect has been recovered.	Yes: End. No: Next.
7	Carry out Level3 in Prevent Uunevenness Mode, and then check that the defect has been recovered.	Yes: End. No: Next
8	Even when Medium Cleaning is carried out, waste ink is not sucked from Purge Unit.	Yes: After replacing Pump Unit, Carry out Medium Cleaning. No: Next.
9	Blade, Cap, or Cap Base is deformed.	Yes: After replacing Purge Unit, carry out Light Cleaning, Medium Cleaning, and Strong Cleaning. No: Next.
10	Wipe Printhead face with cleaning stick, and then check that the defect has been recovered.	Yes: Wipe Printhead face with cleaning stick, and then carry out Light Cleaning, Medium Cleaning, and Strong Cleaning. No: Next.
11	Replace Printhead, and then check that the defect has been recovered.	Yes: End. No: Next.
12	Print Module is not installed properly.	Yes: End. No: Next.
13	Replace Print Module.	End.

Ink Adhesion (Ink Dripping)

State in which ink collected in Printhead or Purge Unit drips off to transport area, and as a result ink adheres to the front/back surface of the print sheet.

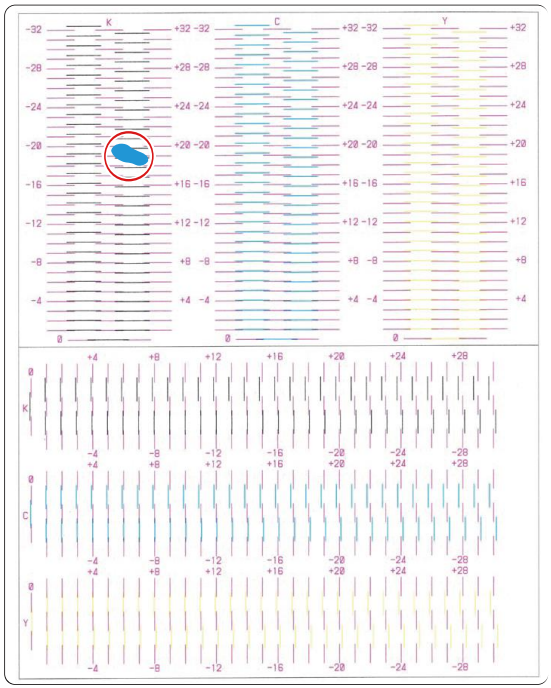

Feeding Direction

<Remedy>

Procedure	Check Item	Remedy
1	Print Module is not installed properly.	Yes: Reinstall it properly. No: Next.
2	Even when Medium Cleaning is carried out, waste ink is not sucked from Purge Unit.	Yes: After replacing Pump Unit, carry out Medium Cleaning. No: Next.
3	Blade, Cap, or Cap Base is deformed.	Yes: After replacing Purge Unit, carry out Light Cleaning, Medium Cleaning, and Strong Cleaning. No: Next.
4	Wipe Printhead face with cleaning stick, and then check that the defect has been recovered.	Yes: Wipe Printhead face with cleaning stick, and then carry out Light Cleaning, Medium Cleaning, and Strong Cleaning. No: Next.
5	Replace Printhead, and then check that the defect has been recovered.	Yes: End. No: Next.
6	Replace Print Module.	End.

Malfunction

Manual Printhead Install Position Change

Symptom

If the printer does not power up due to a printer failure or some other problem or if an error occurs, it may not be possible to change Printhead install position (confirm the connection between Printhead PCB and the printer connector) using Service Utility.

Remedy

After changing Printhead install position manually, reinstall Printhead (confirm the connection between Printhead PCB and the printer connector).

Preparation

Manual Printhead Install Position Change

1. Remove Upper Cover Unit (see ch. "Removing Upper Cover Unit".)
2. Remove Right Cover. (see ch. "Removing Right Cover".)
3. Remove Maintenance Cover. (see ch."Removing Maintenance Cover".)
4. Remove Print Module Cover.
5. Rotate pulley to move Printhead to Printhead install position.

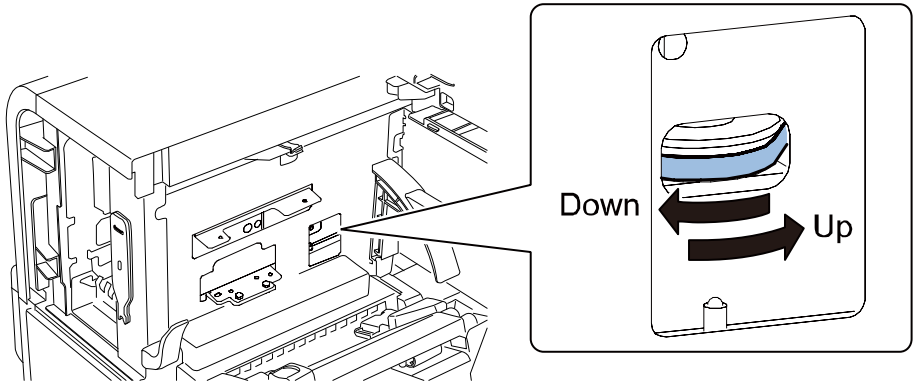

NOTE:
The state that the upper head release lever stopper is at the curved area of the side panel end face is Printhead install position.

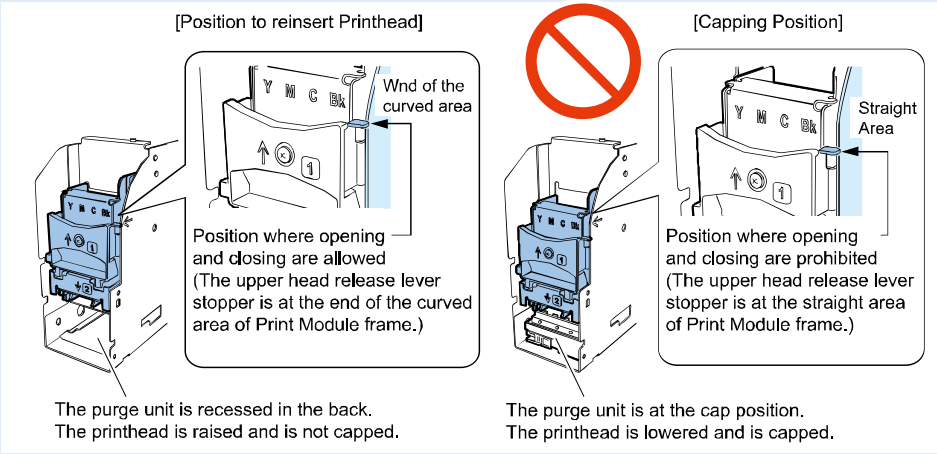

Procedure

Reinsertion of Printhead (confirm the connection between Printhead PCB and the printer connector)

1. Check that Printhead is at the head install position, and open the upper head release lever.

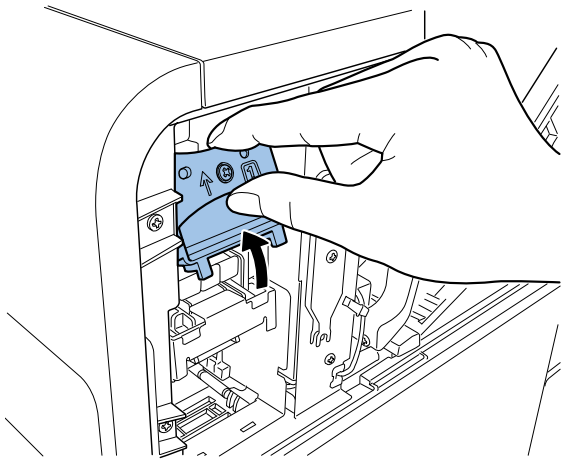

CAUTION:
When operating the upper head release lever, if the upper head release lever stopper interferes with the Printer Module plate, the upper head release lever stopper is not raised fully and has not moved to the head install position. If this happens, rotate the pulley until it no longer rotates.

2. Close Upper Printhead Release Lever.
3. Confirm that Upper Printhead Release Lever is firmly closed as shown in the figure.

CAUTION:
Improper closing of Upper Printhead Release Lever may cause Printer failure.

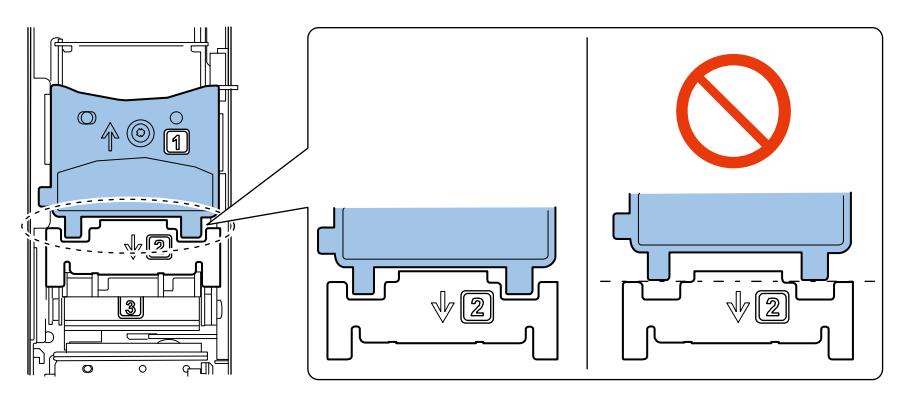

4. Attach Maintenance Cover.
5. Restart Printer.

CAUTION:
If you finish the procedure without restarting the printer, Printhead will not be capped.
This will cause image detects and Printhead failures. Be sure to restart the printer.

Printhead Replacement at the Occurrence of a Power Supply Error

CAUTION:
Semiconductive components are used in Printhead. As careless handling of Printhead under low humidity may cause electrostatic destruction in it, be sure to wear a grounding wrist strap prior to the handling.

Symptom

If a power supply error (service call error: 0214, 0215) occurs, Replacement of Power Supply Unit using Service Utility cannot be executed. (see "02: Power Failure".)

Remedy

After moving Printhead to reinsertion position manually, and then replace it.

Procedure

1. Move Printhead to reinsertion position manually. (see ch. "Manual Printhead Install Position Change".)
2. Remove Purge Unit. (see ch. "Removing Purge Unit".)
3. Open Upper Unit, and then set Cleaning Towel on Transport Unit as following figure.

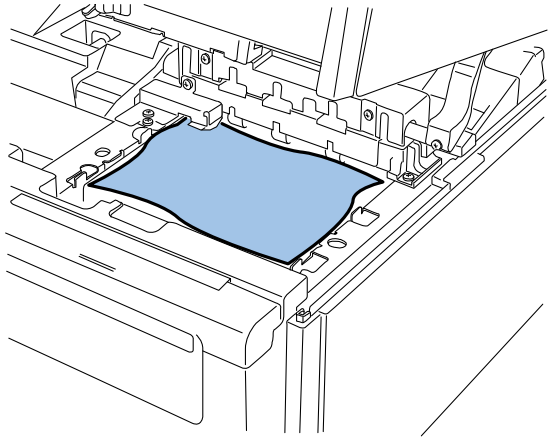

4. Close Upper Unit, and then open Upper Printhead Release Lever.

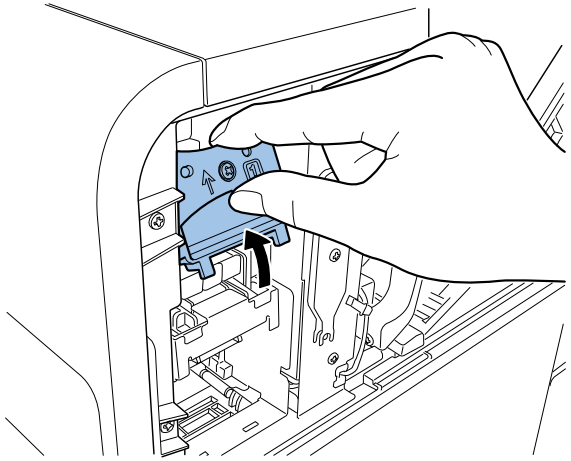

CAUTION:
When operating the upper head release lever, if the upper head release lever stopper interferes with the Printer Module plate, the upper head release lever stopper is not raised fully and has not moved to the head install position. If this happens, rotate the pulley until it no longer rotates.

5. Open Lower Printhead Release Lever.

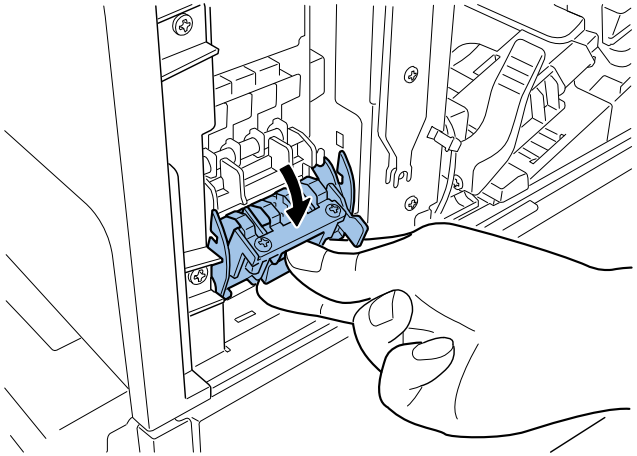

6. Replace Printhead. (see ch. "Replacing Printhead".)

CAUTION:
If you remove Printhead without draining the ink, ink may leak from Printhead.

CAUTION:
If you finish the procedure without restarting the printer, Printhead will not be capped.
This will cause image detects and Printhead failures. Be sure to restart the printer.

7. Remove Cleaning Towel on Transport Unit.

Adjustment

Part Replacement Adjustment List

This section introduces necessary adjustment when replacing the following service parts.

Target Part	Adjustment Item
Print Module	Print Module Setup (Various Adjustment values (*1) entry (labeled))
	Image Position Adjustment
Printhead	Image Position Adjustment
Purge Unit	Blade Position setup (*2)
	Purge Unit Wipe Position setup (labeled)
Transport Unit	Vertical Scale Adjustment
	Printhead Slant Adjustment
	Registration Adjustment
Paper Guide Unit / Paper Width Sensor	Paper Guide Position Adjustment
Printer Controller PCB	In the case, data in old PCB can be retrieved to PC • Retrieve the data from old PCB to PC • Replace Printer Controller PCB • Send the data from PC to new PCB • Update the latest firmware version.
	In the case, data in old PCB cannot be retrieved to PC • Various adjustment values (*3) entry (labeled) • Product destination setting • Paper Guide Position Adjustment • Image Position Adjustment • Serial number entry • Update the latest firmware version.

(*1) Head Wipe Position, Head Cap Position, Head Print Position, Purge Unit Wipe Position.
These adjustment values are indicated on labels.
(*2) Using Blade Position Adjustment Tool (included with service part)
(*3) Head Wipe Position, Head Cap Position, Head Print Position, Purge Unit Wipe Position, Head to Platen Distance.
These adjustment values are indicated on labels.

Adjustment and Setup

Image Position Adjustment

Image Position Adjustment is an adjustment necessary when unit is replaced for one of Print Module, Printheads, and Transport Unit.

Adjustment in the following order.

- Vertical Scale Adjustment
- Printhead Slant Adjustment
- Registration Adjustment

Vertical Scale Adjustment

This is the function to adjust image shrinkage or enlargement of transport direction.

Paper Length Requirements

- Paper length: 100 mm. or more

Vertical Scale Adjustment Procedure

1) Connect PC to Printer, and then start Service Utility.
2) Open the [Test Print / Adjustment] tab and click [Vertical Scale Adjustment] to display the [Vertical Scale Adjustment] dialog box.
3) Print Vertical Scale Adjustment Pattern.
4) Measure the length of the printed frame of test print at transport direction.
5) Enter the length using [Vertical Scale Adjustment] of Service Utility.

If the length is “100 mm”, adjustment is not required.

> NOTE:
> This adjustment requires to perform for each paper width below.
> - 35mm or less (Paper width : S)
> - More than 35mm to 73mm (Paper width : M)
> - More than 73mm (Paper width : L)

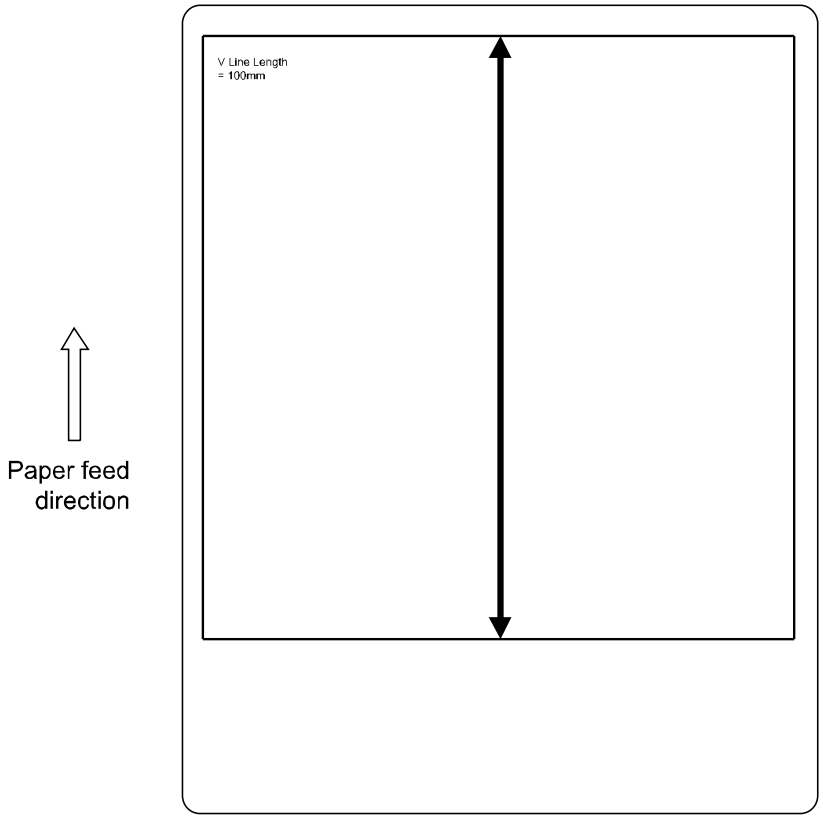

Printhead Slant Adjustment

This is the function to adjust when an image is printed on a skew to paper by some reason.

Paper Size Requirements

- Paper width: 4 inch , Paper length: 5 inch or more

Printhead Slant Adjustment Procedure Outline

1) Connect PC to Printer and start the Service Utility.
2) Display the dialog box according to the following procedure.
   - Service Utility > Test Print / Adjustment > Printhead Slant Adjustment

Bk Adjustment Procedure

- Read the adjustment values of the lines printed perpendicular to the reference line printed in the feed direction.
- Enter the read value in Service Utility, and save it in Printer.

C,M,Y Adjustment Procedure

- Read values at which Black lines are in line with line of each color (Cyan, Magenta, or Yellow).
  If the left and right values are the same, no adjustment is necessary.
- Enter the read value in Service Utility, and save it in Printer.

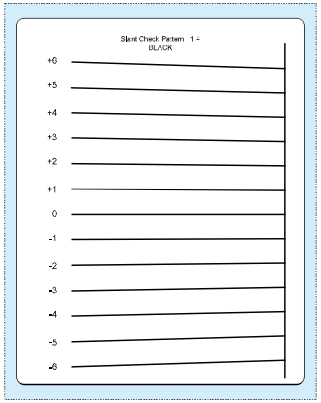

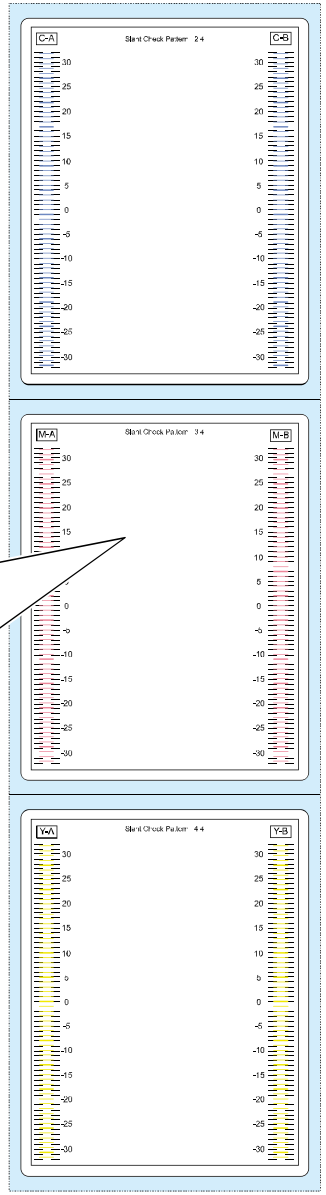

- No adjustment is required because value of A is the same as value of B.
- When value of A is different from value of B, adjustment is required.
  M-A: Enter +2.
  M-B: Enter +3.

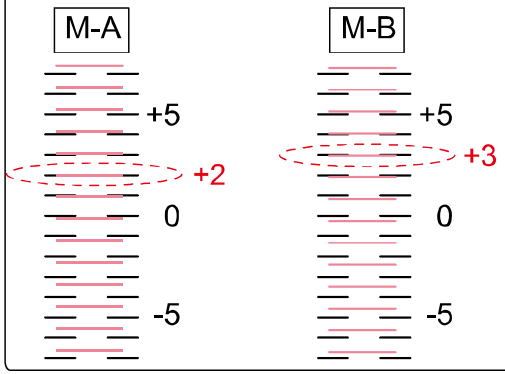

■ Registration Adjustment

● T-K Gap Adjustment (Reference Position)

This function corrects the reference position when the outer black frame (Bk Printhead) is not centered. The margin is corrected by changing the print start timing relative to the detection of the paper leading edge by the TOF sensor.
In addition, the left margin, which is the print reference, is corrected by shifting the nozzle used for printing. Be sure to perform T-K gap adjustment (reference position) before vertical and horizontal registration adjustment.

Paper Size Requirements

- Paper width: 1 inch or more, Paper length: 1.5 inch or more

Registration Adjustment Procedure

Entering adjustment value using Service Utility.

- Service Utility > Test Print / Adjustment > Registration Adjustment

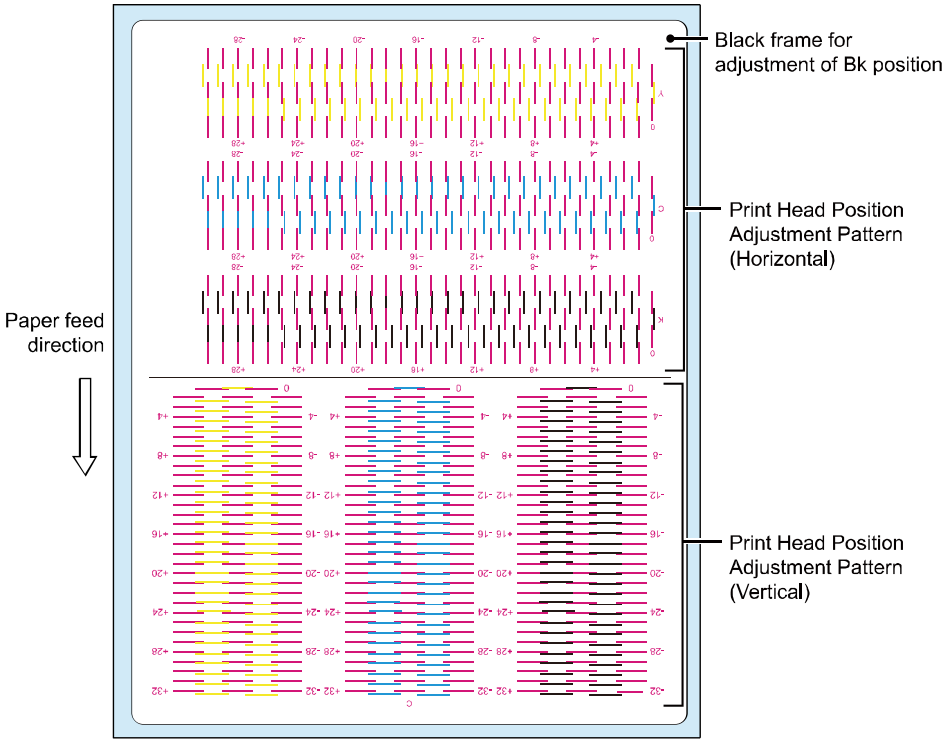

● Vertical and Horizontal Registration Adjustment

Vertical and horizontal registration adjustment corrects drifts in print position of each color-specific Printhead. Vertical registration adjustment varies interval of time between detection of the leading edge of paper by TOF Sensors and start of printing to correct drifts in print position from other Printheads.
Horizontal registration adjustment shifts nozzles used for printing to correct drifts in print position from other Printheads.

Paper Size Requirements

- Paper width: 1 in. or more, Paper length: 1.5 in. or more

Vertical and Horizontal Registration Adjustment Procedure

Read numerical values of the vertical and horizontal lines which connected smoothly to magenta ruler line. Entering the numerical values using Service Utility. If the vertical and horizontal lines connected smoothly to magenta ruler line at "0", adjustment is not required.

- Service Utility > Test Print / Adjustment > Registration Adjustment

NOTE:
Reference Color of Registration Adjustment
Last model of Printer carries out image position adjustments in relation to print position in Bk Printhead.
This Printer carries out image position adjustments in relation to print position in M Printhead.
Smaller spacing between color-specific Printheads, less Printer would affected by transport accuracy, resulting in enhanced different-colored dot-matching accuracy.

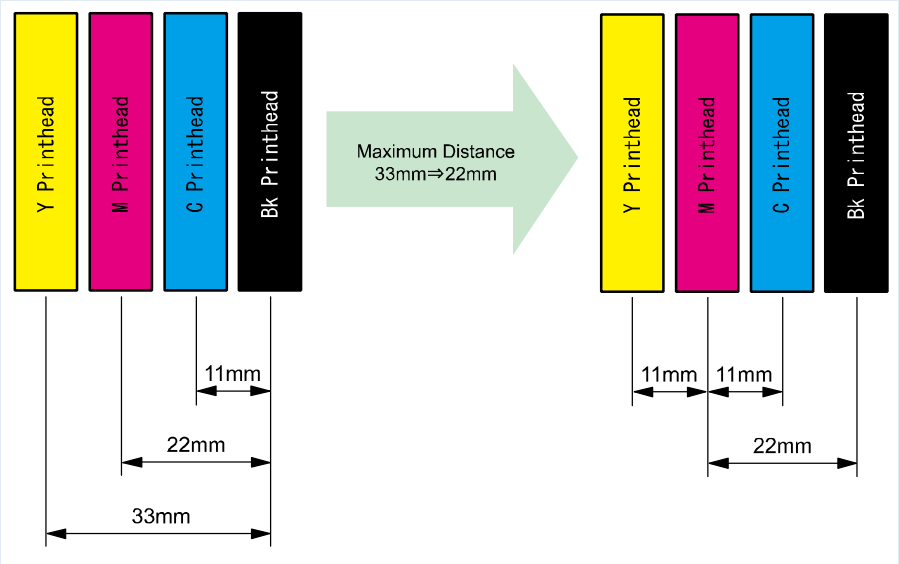

■ Registration Fine Adjustment (Vertical Registration Adjustment (Detail))

This is the function to adjust the vertical registration in detail.

Paper Size Requirements

- Paper width: 1 inch or more, Paper length: 1.5 inch or more

Vertical Registration Adjustment Procedure

Read the values of the vertical or horizontal lines that appear to connect most smoothly (without steps) to magenta scale lines.
Enter the correction values in Registration Fine Adjustment of Service Utility.
If the lines connect at the "0" position, no adjustment is necessary.

- Service Utility > Test Print/ Adjustment > Registration Fine Adjustment

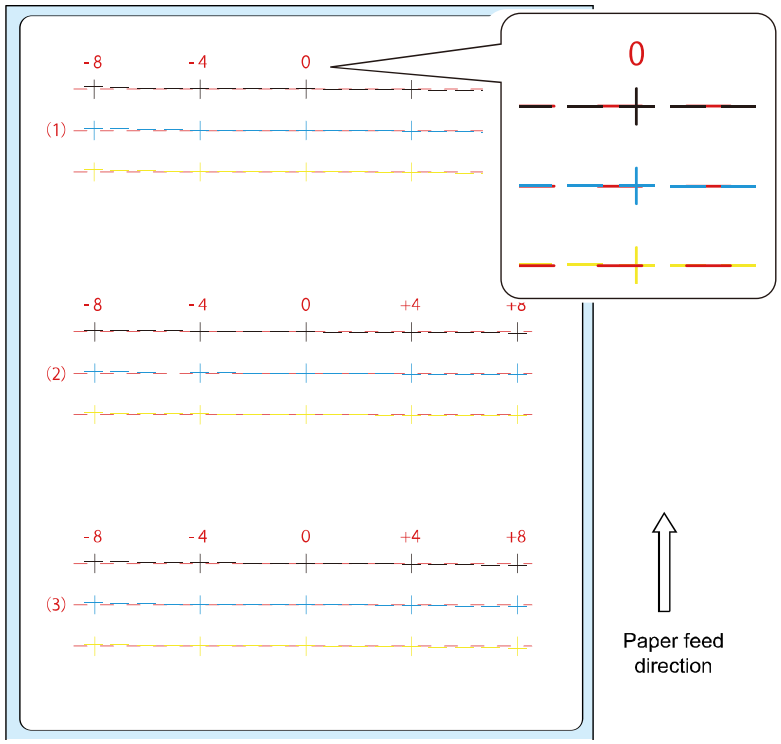

■ Non-Firing Nozzle Complement

This is the function to complement of non-firing nozzle using next nozzle of non-firing nozzle, in the case non-firing nozzle is not recover by cleaning. If the non-firing nozzle are next each other, it can not be complemented.

NOTE:
- Non-firing Nozzle Check Pattern consists of 2 dots.

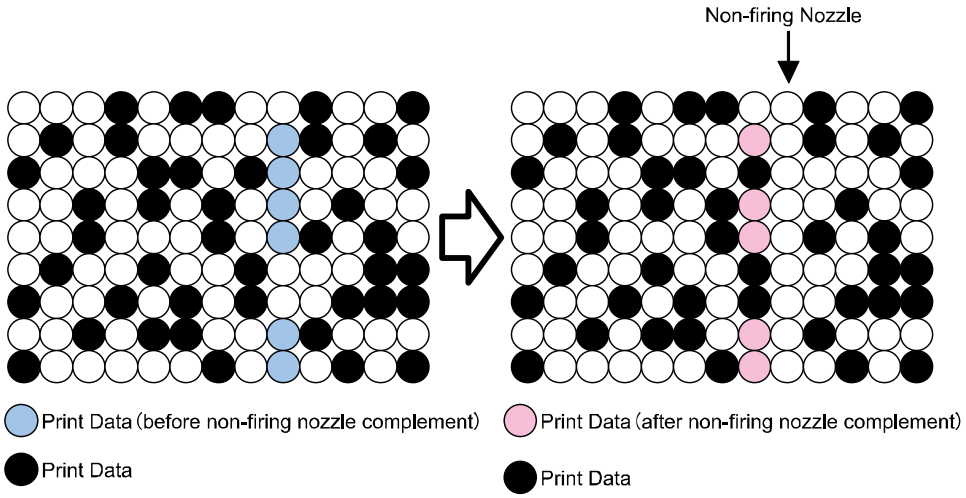

Paper Size Requirements

- Paper width: 4 in. , Paper length: 5 in.

Non-Firing Nozzle Complement Procedure

1) Connect PC to Printer, and then start Service Utility.
2) Open the [Test Print / Adjustment] tab and click [Complement non-firing nozzle] to display the [Non-firing nozzle complement setting] dialog box.
3) Click [Non-firing Nozzle Pattern] to print non-firing nozzle check pattern.
4) Check non-firing nozzle check pattern, and find non-firing nozzle.
5) Enter the page, row number, column number of identified nozzle, and then click [Send].
6) Click [Non-firing Nozzle Complement Confirmation Pattern] to print the non-firing nozzle complement confirmation pattern and check the non-firing nozzle is complemented.

In this case, non-firing nozzle position is black Printhead, first test print,50th in row, 9th colum.

Page:1 Row(X):50 Column(Y):9

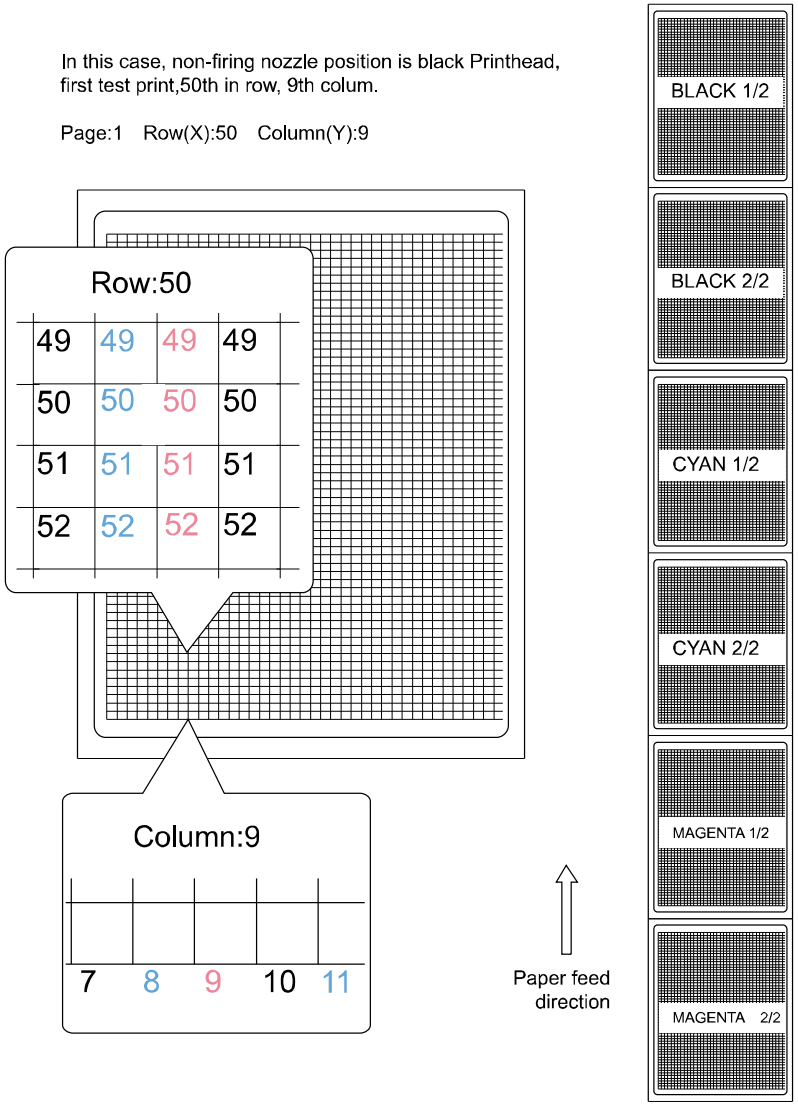

■ Print Module Setup

● In the case, Printer Controller PCB is replaced without data retrieving from old Printer Controller PCB to PC

1) Record 5 adjustment values in the labels on new Print Module, new Purge Unit and the arm of Upper Unit. See illustrations below.
   - Wipe_P
   - Print_P
   - Cap_P
   - Rec wipe P
   - H-P

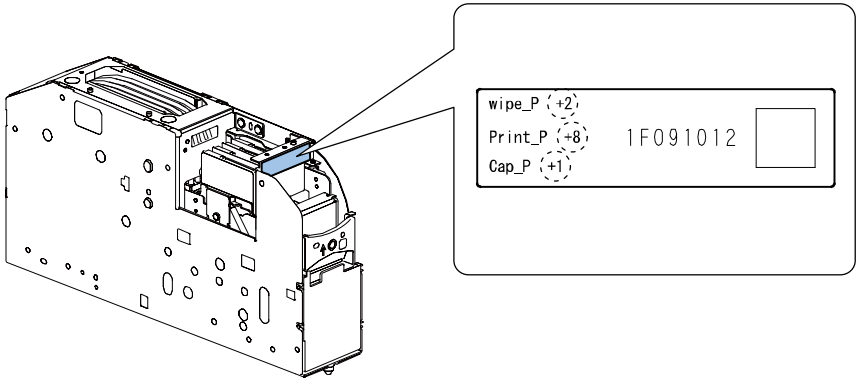

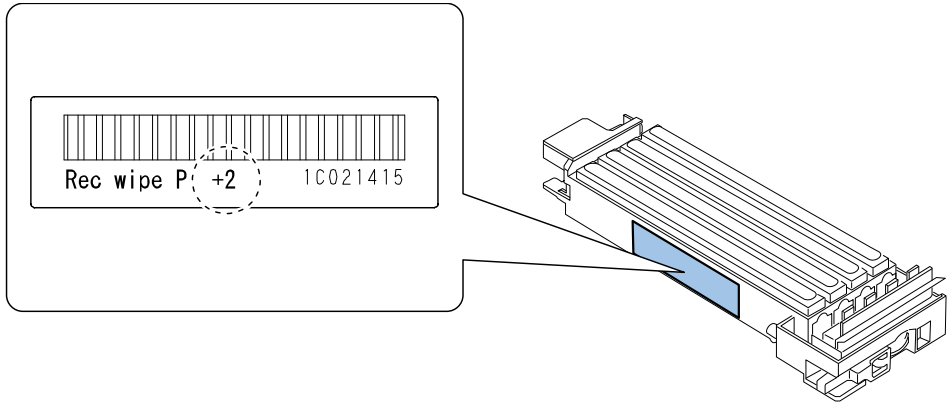

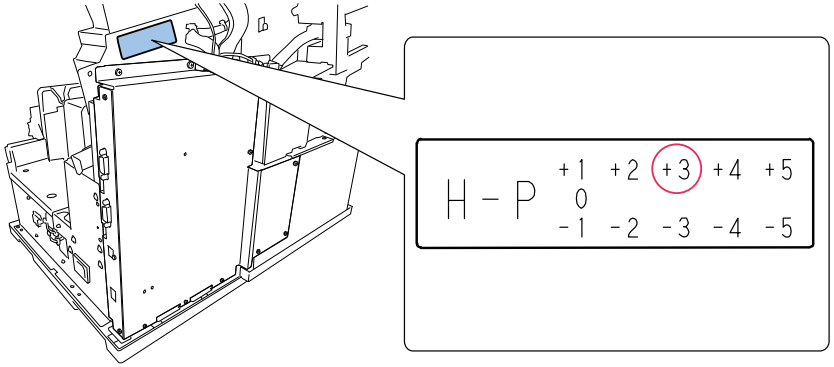

2) Replace Printer Controller PCB and install all the parts.
3) Connect PC to Printer, and then start Service Utility.
4) Open the [Parts Replacement] tab and click [Print Module Setup] to display the [Print Module Setup] dialog box.
5) Enter the 5 adjustment values to rewrite the flash ROM data in Printer Controller PCB to new adjustment values.

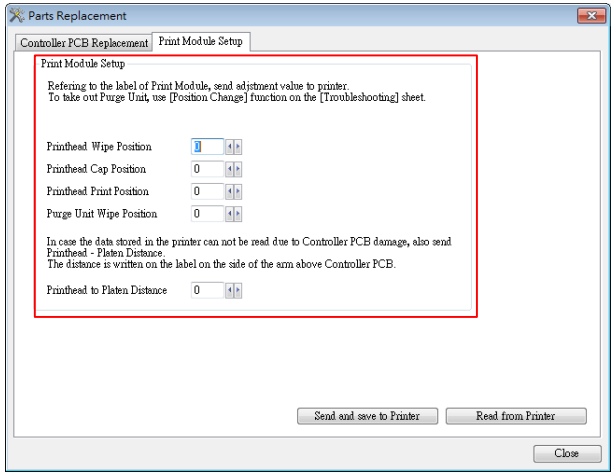

NOTE:
- Enter value of "wipe_P " to "Head Wipe Position"
- Enter value of "Print_P " to "Head Print Position"
- Enter value of "Cap_P " to "Head Cap Position"
- Enter value of "Rec wipe P " to "Purge Unit Wipe Position"
- Enter value of "H-P " to "Head to Platen Distance"

6) Click [Load and save to Printer].

In the case, Print Module is replaced

1) Record 4 adjustment values in the labels on new Print Module and new Purge Unit.
   See illustration below.
   - wipe_P
   - Print_P
   - Cap_P
   - Rec wipe P

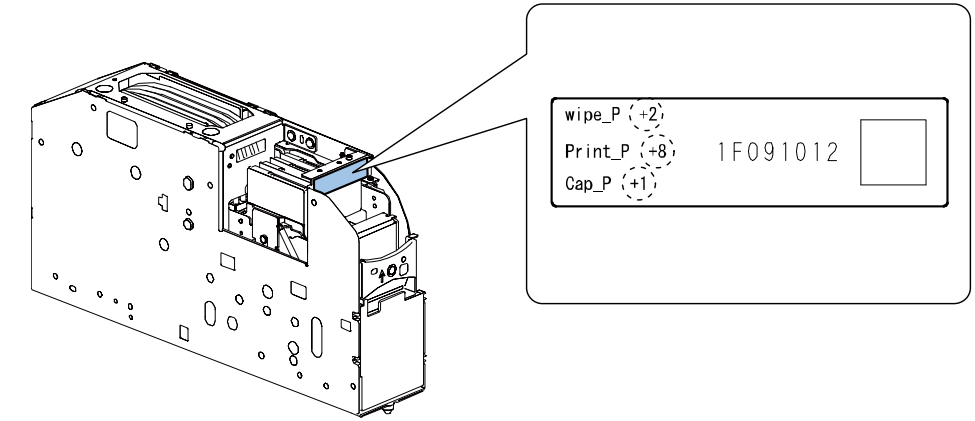

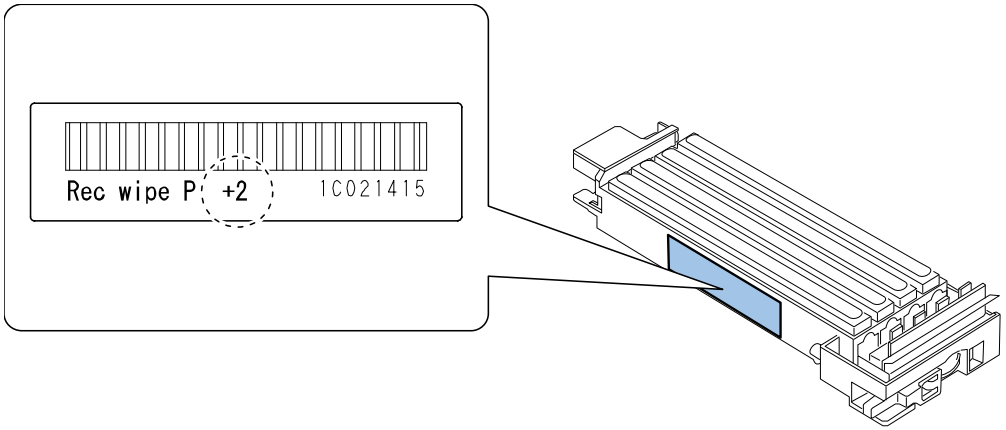

2) Replace Print Module and install all the parts.
3) Connect PC to Printer, and then start Service Utility.
4) Open the [Parts Replacement] tab and click [Print Module Setup] to display the [HPrint Module Setup] dialog box.
5) Enter the 4 adjustment values to rewrite the flash ROM data in Printer controller PCB to new adjustment values using Service Utility.

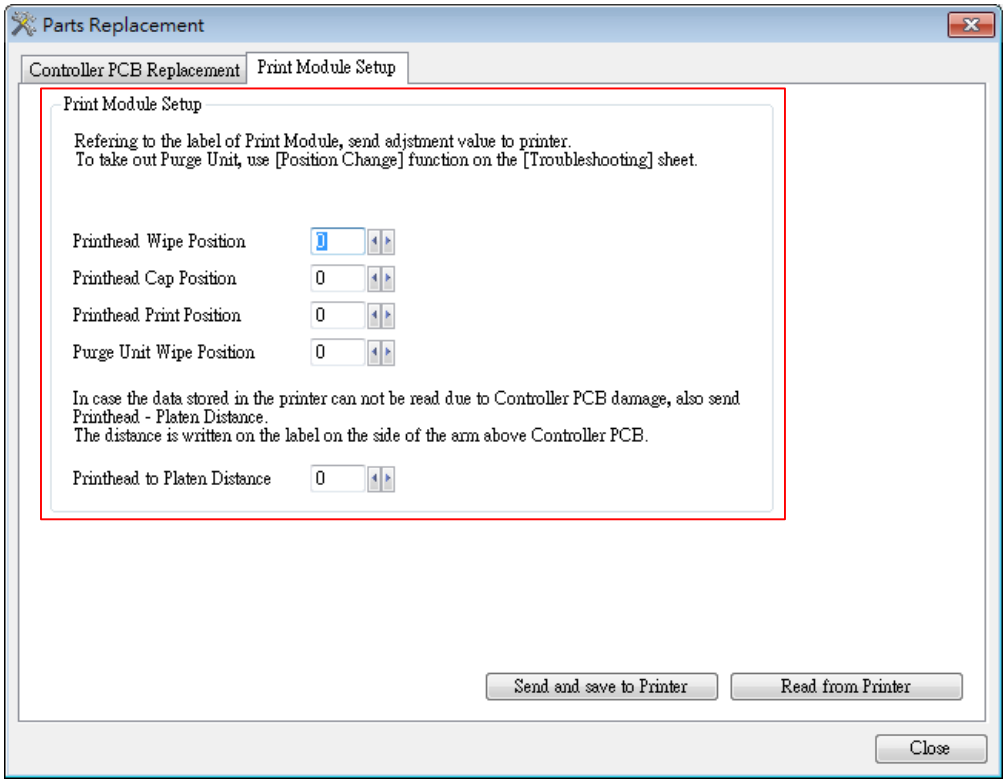

NOTE:
- Enter value of "wipe_P " to "Head Wipe Position"
- Enter value of "Print_P " to "Head Print Position"
- Enter value of "Cap_P " to "Head Cap Position"
- Enter value of "Rec wipe P " to "Purge Unit Wipe Position"

6) Click [Load and save to Printer].

■ Purge Unit Wipe Position Setup

This is an adjustment when Purge Unit is replaced.

1) Record adjustment value in the label on new Purge Unit.
   See illustration below.
   - Rec wipe P

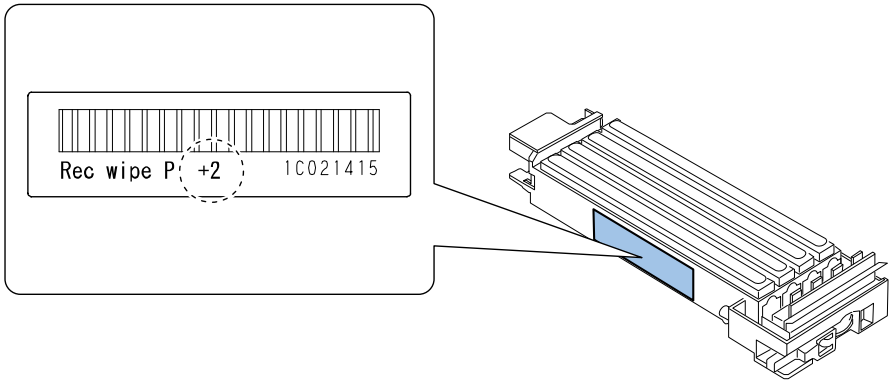

2) Replace Purge Unit and install all the parts.
3) Connect PC to Printer, and then start Service Utility.
4) Open the [Parts Replacement] tab and click [Print Module Setup] to display the [Print Module Setup] dialog box.
5) Enter the adjustment value to rewrite the flash ROM data in Printer controller PCB to new adjustment value using Service Utility.

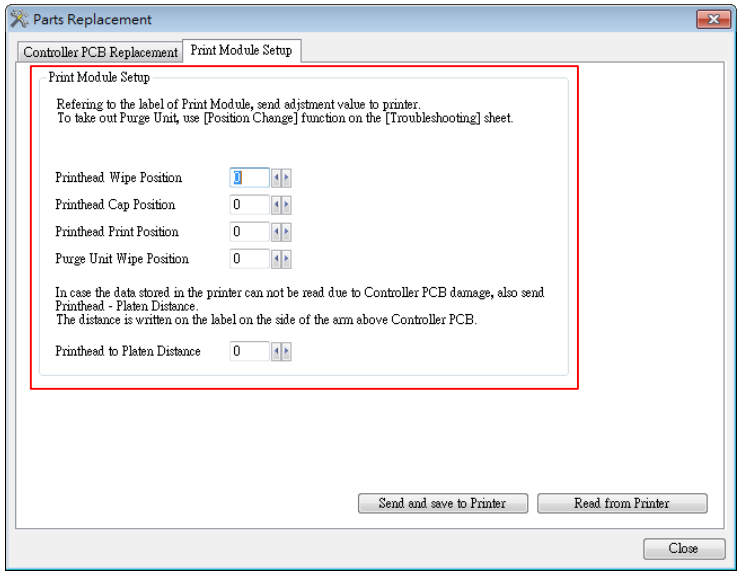

NOTE:
Enter value of "Rec wipe P" to "Purge Unit Wipe Position"

6) Click [Load and save to Printer].

Blade Position Setup

This is an adjustment when Purge Unit is replaced. Adjust blade position using Blade Position Adjustment Tool when Purge Unit is replaced. The adjustment tool comes with new Purge Unit.

1) Loosen the screw.

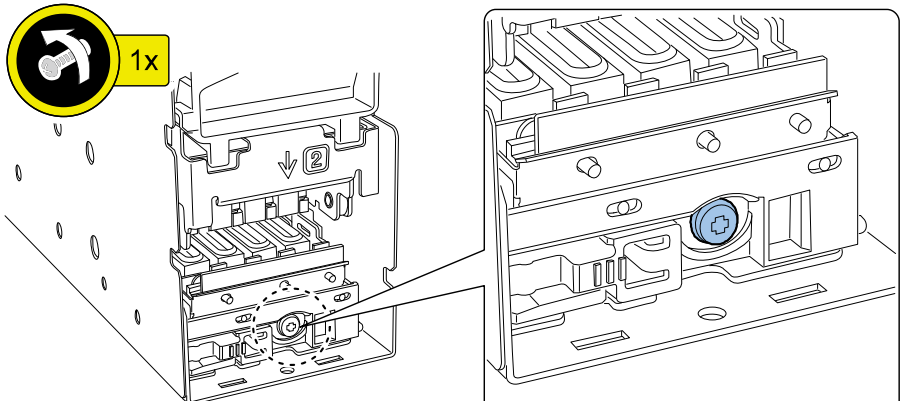

2) Set 2 key pins on holder of Blade with Blade position adjustment tool, set the gap of Blade Position Adjustment Tool to Print Module side plate that is registration position.

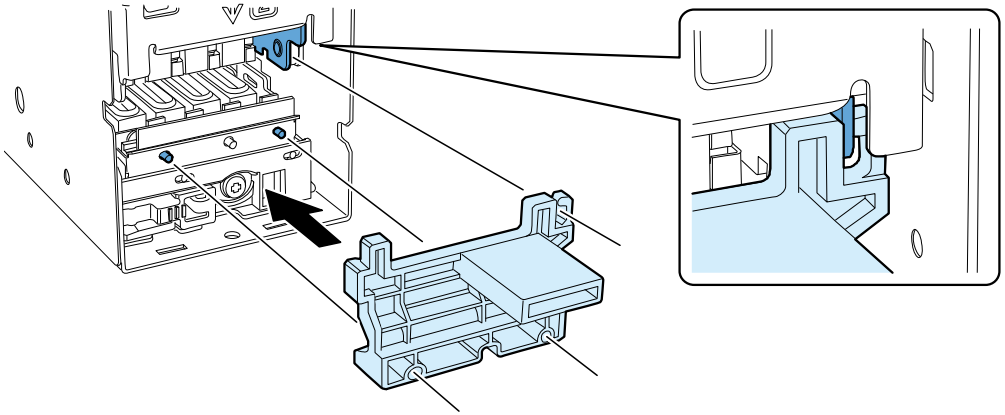

3) Tighten the screw of blade fixing to fix blade.

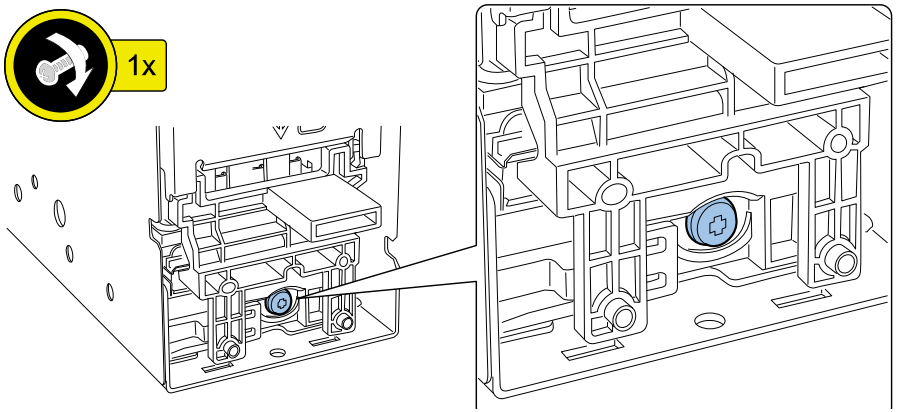

4) Remove Blade Position Adjustment Tool.

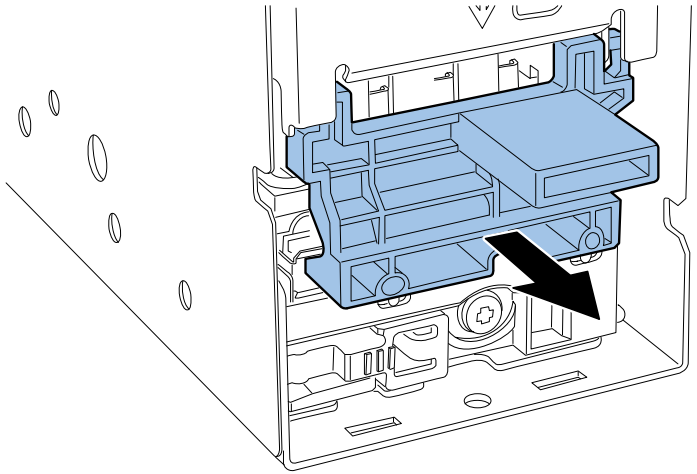

■ Paper Guide Position Adjustment

This is an adjustment when Paper Guide Unit or Lower Cover Unit is replaced. Adjust Paper Width Sensor using Service Utility.

Paper Guide Position Adjustment Procedure

1) Connect PC to Printer, and then start Service Utility.
2) Open the [Parts Replacement] tab.

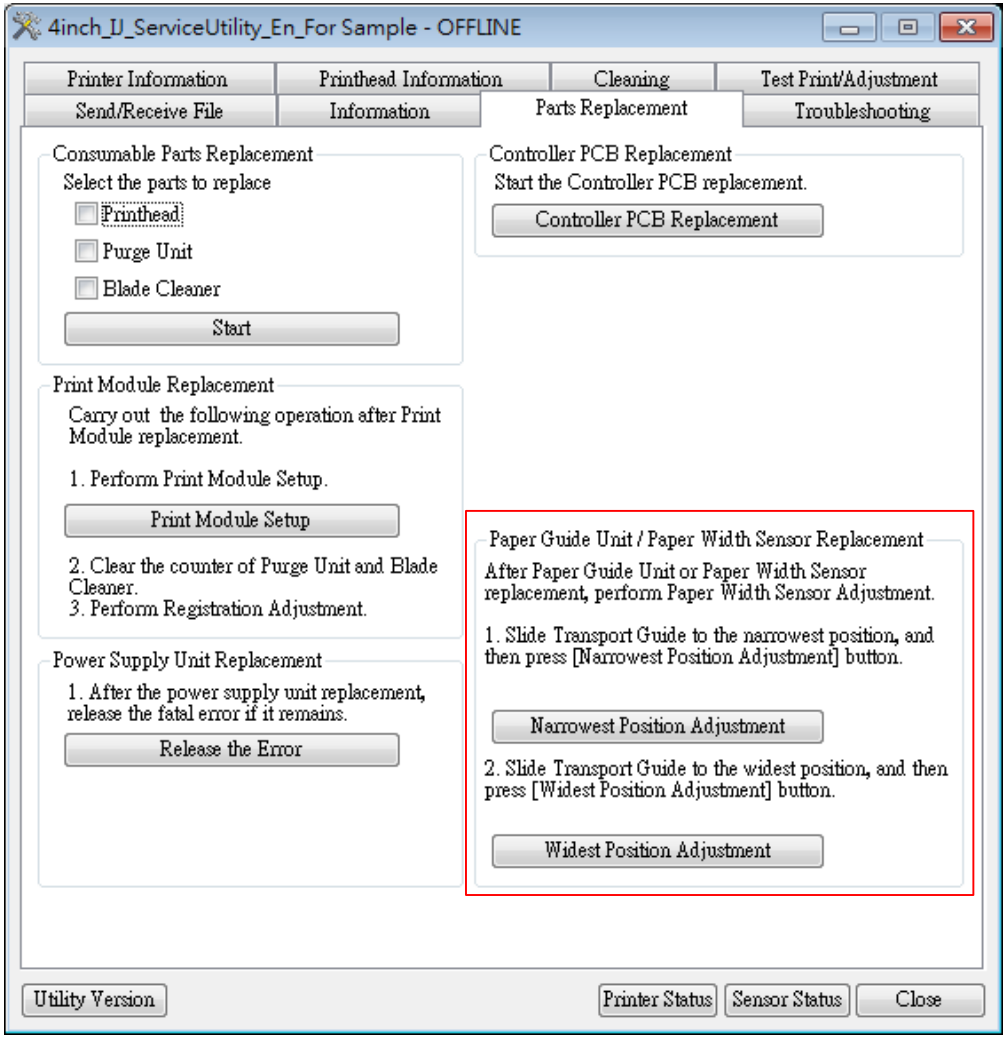

3) Slide Transport Guide to the narrowest position, and then click [Narrowest Position Adjustment].

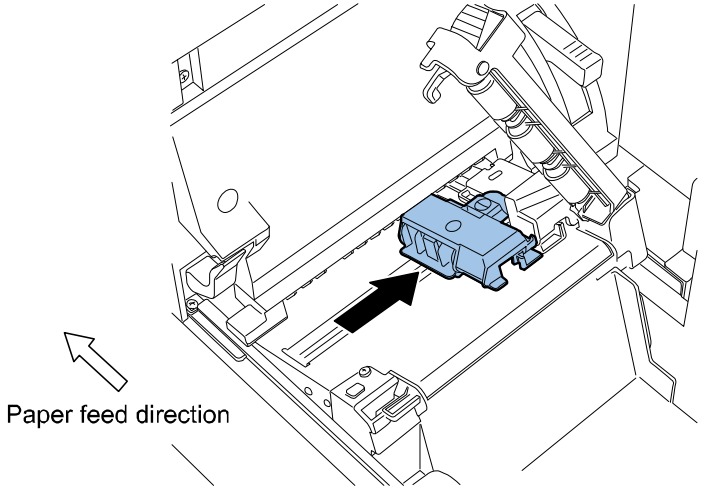

4) Slide Transport Guide to the widest position, and then click [Widest Position Adjustment].

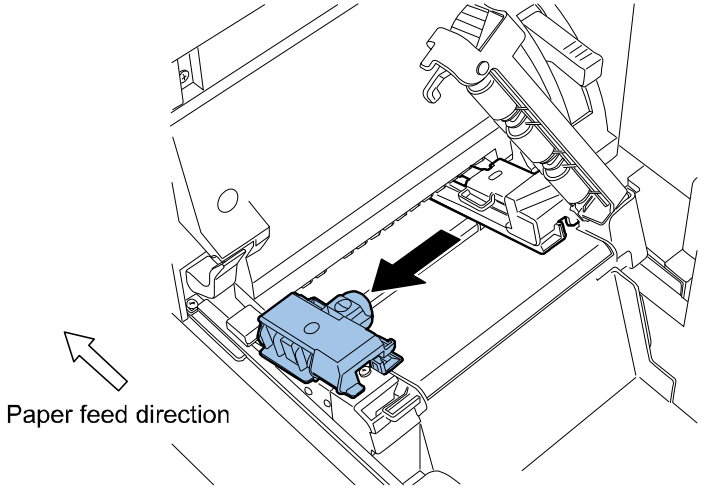

Error Code

Overview

This chapter lists codes that appear when problems occur with Product. These codes are classified into 3 groups.

Code Type	Description
Service Call Error	If Printer fails, Operation Panel [ERROR] Lamp flashes to signal the error state. Further, an error code consisting of 4 alphanumeric characters appears in Printer Driver Status Monitor or in Service Utility Management Information window.
Operator Call Error	If an Operator Call Error occurs, Operation Panel [ERROR] Lamp lights and a message displays in Printer Driver Status Monitor. If Service Utility is active, an error code consisting of 4 alphanumeric characters appears in Printer Status window, along with a description of the operator call.
Warning	If Printer enters a warning state, a message appears in Printer Driver Status Monitor. If Service Utility is active, an error code consisting of 4 alphanumeric characters appears in Printer Status window, along with a description of the warning.

Service Call Error

NOTE:
If Service Call Error occurs, turn off and then on Printer. If the same error recurs, eliminate the cause of the error according to the remedy in the following table.

Code	Detail Code	Item	Description
01: Printer Controller PCB Failure			
01	01	Title	Flash ROM failure
		Description	At start of Printer, a flash ROM checksum error occurs.
		Remedy	1. Rewrite the firmware. 2. Replace Printer Controller PCB.
01	02	Title	SDRAM failure
		Description	At start of Printer, an SDRAM data write/read error occurs.
		Remedy	Replace Printer Controller PCB.
01	03	Title	VRAM failure
		Description	At start of Printer, VRAM data read/write error occurs.
		Remedy	Replace Printer Controller PCB.
01	04	Title	AD failure
		Description	At start of Printer, the reference voltage for A/D conversion is abnormal.
		Remedy	1. Replace Printer Controller PCB. 2. Replace DC Power PCB Unit.
01	05	Title	Sensor 3.3V was not turned OFF correctly.
		Description	At Printer Controller shutdown, 3.3V is not detected.
		Remedy	1. Check Encoder Sensor connector. 2. Check Paper Width Sensor connector. 3. Check Operation Panel PCB connector. 4. Replace Encoder Sensor. 5. Replace Paper Width Sensor. 6. Replace Operation Panel PCB. 7. Replace Printer Controller PCB. If this error persists after the sensor harness connector is disconnected from the connector on Printer Controller PCB, this PCB is defective. 8. Check output of DC Power PCB Unit. 9. Replace DC Power PCB Unit.
01	06	Title	Title Sensor 5.0V was not turned OFF correctly.
		Description	At hardware shutdown, 5.0V for Printer Controller PCB is not detected.
		Remedy	1. Replace Printer Controller PCB. 2. Replace DC Power PCB Unit.
01	07	Title	Motor 24V was not turned OFF correctly
		Description	At Printer Controller shutdown, 24V for motor system is not detected.
		Remedy	1. Replace Printer Controller PCB. 2. Replace DC Power PCB Unit.
01	08	Title	Title Printhead 5V was not turned OFF correctly.
		Description	At Printer Controller shutdown, 5.0V for Printhead is not detected.
		Remedy	1. Replace Printer Controller PCB. 2. Replace DC Power PCB Unit.
01	09	Title	Title Printhead 24V was not turned OFF correctly.
		Description	At maintenance jet, sub-heating, or printing end, 24V for Printhead is not detected normally.
		Remedy	1. Replace Printer Controller PCB. 2. Replace DC Power PCB Unit.
01	0A	Title	Title VHTM of the fuse to be blown.
		Description	When 12V for Printhead is turned ON with 12V fuse of Print Controller PCB blown, the blown fuse signal is turned ON.
		Remedy	1. Replace Printer Controller PCB. CAUTION: Before replacing parts, check the following. • Check the connections between Printer Controller PCB and Printhead. Check the connections between DC Power Supply PCB and Printhead. Without checking the connections, the fuse may blow again. • Confirm that Upper Printhead Release Lever is firmly closed. (Refer to Parts Replacement and Cleaning > Periodic Replacing Parts,Durable Parts > Removing Printhead Unit)

NOTE:
- Even when the cause of the error (detail code: 05 to 09) is removed, the same error code is displayed when Printer is restarted as long as the retained error is cleared.
- Using Service Utility, clear the retained error and restart Printer.
  - Service Utility > Parts Replacement > Release the Error

CAUTION:
The stored Printer Controller PCB data contains MAC address and other network information. When stored data is restored onto a new Printer Controller PCB, this information is also transferred along with the service settings, so note the following:

- When stored data is restored
  Because the same network information before the Printer Controller PCB is replaced is transferred, there is no need to change the printer driver settings. Because the Printer Controller PCB that the stored data is restored onto has the same MAC address as the original Printer Controller PCB, do not install it in a printer with a different serial number.
- If the stored data cannot be restored
  Because network information such as the MAC address and IP address is not transferred, the printer driver must be reinstalled, or the print port must be reconfigured.

Code	Detail Code	Item	Description
02: Power Failure			
02	11	Title	Printer Controller PCB 3.3V was not turned ON correctly.
		Description	At Printer Controller initialization, 3.3V for Printer Controller PCB is not detected.
		Remedy	Remedy Replace DC Power PCB Unit.
02	12	Title	Printer Controller PCB 5.0V was not turned ON correctly.
		Description	At Printer Controller initialization, 5.0V for Printer Controller PCB is not detected.
		Remedy	Replace DC Power PCB Unit.
02	13	Title	Motor 24V was not turned ON correctly.
		Description	At Printer Controller initialization, 24V for motor system is not detected.
		Remedy	Replace DC Power PCB Unit.
02	14	Title	Printhead 5V was not turned ON correctly.
		Description	At Printer Controller initialization, 5.0V for Printhead is not detected.
		Remedy	1. Check output of DC Power PCB Unit. 2. Replace Printhead.(see ch. "Printhead Replacement at the Occurrence of a Power Supply Error".) 3. Replace Printhead Relay PCB. 4. Replace Flexible Cable. 5. Replace Printer Controller PCB. 6. Replace DC Power PCB Unit.

Code	Detail Code	Item	Description
02	15	Title	Printhead 24V was not turned ON correctly.
		Description	At hardware initialization or open upper unit, 24V for Printhead is not detected.
		Remedy	1. Confirm the connection between DC Power PCB Unit (J202) and Printer Controller PCB (J102). 2. Replace DC Power PCB Unit. 3. Replace Printer Controller PCB.

NOTE:
Even when the cause of the error (detail code: 11 to 15) is removed, the same error code is displayed when Printer is restarted as long as the retained error is cleared.

- Using Service Utility, clear the retained error and restart Printer.
- Service Utility >Parts Replacement> Release the Error

Code	Detail Code	Item	Description
05: Printhead Position Error			
05	20	Title	Printhead position error
		Description	When initialization of the position of Printhead located at the cap position is started, Printhead HP Sensor has already been turned ON.
		Remedy	1. Check movement of Printhead Lifter part. 2. Replace Print Module.
05	21	Title	Printhead position error
		Description	Description When initialization of the position of Printhead located at the home position is started, Printhead HP Sensor has already been turned OFF.
		Remedy	1. Check movement of Printhead Lifter part. 2. Replace Print Module.
05	22-2D	Title	Printhead position error
		Description	When movement of Printhead located at the predetermined position toward the home position is started, Printhead HP Sensor has already been turned ON.
		Remedy	1. Check movement of Printhead Lifter part. 2. Replace Print Module.
05	2E	Title	Printhead position error
		Description	When descent of Printhead located at the home position is started for initialization, Printhead HP Sensor has already been turned OFF.
		Remedy	1. Check movement of Printhead Lifter part. 2. Replace Print Module.
05	2F-30	Title	Printhead position error
		Description	When movement of Printhead located at the predetermined position toward the home position is started, Printhead HP Sensor has already been turned ON.
		Remedy	1. Check movement of Printhead Lifter part. 2. Replace Print Module.
05	3D	Title	Printhead position error
		Description	When movement of Printhead located at a position other than the home position is started, Printhead HP Sensor has already been turned ON.
		Remedy	1. Check movement of Printhead Lifter part. 2. Replace Print Module.
05	3E	Title	Printhead position error
		Description	When movement of Printhead located at the home position is started, Printhead HP Sensor has already been turned OFF.
		Remedy	Check movement of Printhead Lifter part.

Code	Detail Code	Item	Description
05	40	Title	Printhead position error
		Description	When Printhead located at the cap position is driven by the predetermined number of pulses after initialization of its position, Printhead HP Sensor is not turned ON.
		Remedy	1. Check movement of Printhead Lifter part. 2. Replace Print Module. 3. Replace Printer Controller PCB.
05	41	Title	Printhead position error
		Description	When Printhead located at the home position is driven by the predetermined number of pulses after initialization of its position was started, Printhead HP Sensor is not turned OFF.
		Remedy	1. Check movement of Printhead Lifter part. 2. Check Printhead Lift Motor connector. 3. Replace Print Module. 4. Replace Printer Controller PCB.
05	42	Title	Printhead position error
		Description	When Printhead located at the wipe position is driven toward the home position by the predetermined number of pulses, Printhead HP Sensor is not turned ON.
		Remedy	1. Check movement of Printhead Lifter part. 2. Check Printhead Lift Motor connector. 3. Replace Print Module. 4. Replace Printer Controller PCB.
05	43	Title	Printhead position error
		Description	When Printhead located at the predetermined position is driven toward the home position by the predetermined number of pulses, Printhead HP Sensor is not turned ON.
		Remedy	1. Check movement of Printhead Lifter part. 2. Check Printhead Lift Motor connector. 3. Replace Print Module. 4. Replace Printer Controller PCB.
05	45	Title	Printhead position error
		Description	When Printhead located at the printing position is driven toward the home position, Printhead HP Sensor is not turned ON.
		Remedy	1. Reset Upper Printhead Release Lever 2. Reset Print Module Cover 3. Check movement of Printhead Lifter part. 4. Check Printhead Lift Motor connector. 5. Replace Print Module. 6. Replace Printer Controller PCB.

Code	Detail Code	Item	Description
05	46-4D	Title	Printhead position error
		Description	When Printhead located at the predetermined position is driven toward the home position by the predetermined number of pulses, Printhead HP Sensor is not turned ON.
		Remedy	1. Check movement of Printhead Lifter part. 2. Check Printhead Lift Motor connector. 3. Replace Print Module. 4. Replace Printer Controller PCB.
05	4E	Title	Printhead position error
		Description	When Printhead located at the home position is driven by the predetermined number of times after descent of it started for initialization, Printhead HP Sensor is not turned OFF.
		Remedy	1. Close Lower Printhead Release Lever. 2. Check movement of Printhead Lifter part. 3. Check Printhead Lift Motor connector. 4. Replace Print Module. 5. Replace Printer Controller PCB.
05	4F-50	Title	Printhead position error
		Description	When Printhead located at the predetermined position is driven toward the home position by the specified number of pulses, Printhead HP Sensor is not turned ON.
		Remedy	1. Check movement of Printhead Lifter part. 2. Check Printhead Lift Motor connector. 3. Replace Print Module. 4. Replace Printer Controller PCB.
05	5E	Title	Printhead position error
		Description	When Printhead located at the home position is driven by the predetermined number of pulses after descent of it started, Printhead HP Sensor is not turned OFF.
		Remedy	1. Check movement of Printhead Lifter part. 2. Replace Print Module. 3. Replace Printer Controller PCB.
05	62	Title	Printhead position error
		Description	When Printhead located at the wipe position moves to the home position, Printhead HP Sensor is turned ON before Printhead has been driven by the predetermined number of pulses.
		Remedy	1. Check movement of Printhead Lifter part. 2. Replace Print Module. 3. Replace Printer Controller PCB.

Code	Detail Code	Item	Description
05	63	Title	Printhead position error
		Description	When Printhead located at the predetermined position moves to the home position, Printhead HP Sensor is turned ON before Printhead has been driven by the predetermined number of pulses.
		Remedy	1. Check movement of Printhead Lifter part. 2. Replace Print Module. 3. Replace Printer Controller PCB.
05	65	Title	Printhead position error
		Description	When Printhead located at the printing position moves to the home position, Printhead HP Sensor is turned ON before Printhead has been driven by the predetermined number of pulses.
		Remedy	1. Reset Upper Printhead Release Lever 2. Reset Print Module Cover 3. Check movement of Printhead Lifter part. 4. Check Printhead Lift Motor connector. 5. Replace Print Module. 6. Replace Printer Controller PCB.
05	66-70	Title	Printhead position error
		Description	When Printhead located at the predetermined position moves to the home position, Printhead HP Sensor is turned ON before Printhead has been driven by the predetermined number of pulses.
		Remedy	1. Check movement of Printhead Lifter part. 2. Replace Print Module. 3. Replace Printer Controller PCB.
06: Purge Unit Position Error			
06	20	Title	Purge Unit position error
		Description	When initialization of the position of Purge Unit located at the cap position is started, Purge Position Sensor has already been turned ON.
		Remedy	1. Check movement of Purge Unit. 2. Replace Purge Position Sensor.
06	21	Title	Purge Unit position error
		Description	When initialization of the position of Purge Unit located at the home position is started, Printhead HP Sensor has already been turned OFF.
		Remedy	Replace Purge Position Sensor.
06	23	Title	Purge Unit position error
		Description	When initialization of the position of Purge Unit located at the cap position is started, Purge Position Sensor has already been turned ON.
		Remedy	1. Check movement of Purge Unit. 2. Replace Purge Position Sensor.

Code	Detail Code	Item	Description

Code	Detail Code	Item	Description
06	24-2A	Title	Purge Unit position error
		Description	When movement of Purge Unit located at the predetermined position toward the home position is started, Purge Position Sensor has already been turned ON.
		Remedy	1. Check movement of Purge Unit. 2. Replace Purge Position Sensor.
06	3D	Title	Purge Unit position error
		Description	When movement of Purge Unit located at a position other than the home position is started, Purge Position Sensor has already been turned ON.
		Remedy	Check movement of Purge Unit.
06	3E	Title	Purge Unit position error
		Description	When movement of Purge Unit located at the home position to the predetermined position is started, Purge Position Sensor has already been turned OFF.
		Remedy	Check movement of Purge Unit.
06	40	Title	Purge Unit was not installed correctly.
		Description	When Purge Unit located at the cap position is driven by the predetermined number of pulses after initialization of its position started, Purge Position Sensor is not turned ON.
		Remedy	1. Check movement of Purge Unit. 2. Check Purge Position Sensor connector. 3. Check Purge Motor connector. 4. Replace Purge Position Sensor. 5. Replace Purge Unit. 6. Replace Printer Controller PCB.
06	41	Title	Purge Unit position error
		Description	When Purge Unit located at the home position is driven by the predetermined number of pulses after initialization of its position started, Purge Position Sensor is not turned OFF.
		Remedy	1. Check movement of Purge Unit. 2. Check Purge Position Sensor connector. 3. Check Purge Motor connector. 4. Replace Purge Position Sensor. 5. Replace Purge Motor. 6. Replace Purge Unit. 7. Replace Printer Controller PCB.
06	43	Title	Purge Unit position error
		Description	When Purge Unit located at the cap position is driven by the predetermined number of pulses after its movement toward the home position started, Purge Position Sensor is not turned ON.
		Remedy	1. Check movement of Purge Unit. 2. Replace Purge Unit. 3. Replace Printer Controller PCB.

Code	Detail Code	Item	Description
06	44-49	Title	Purge Unit position error
		Description	When Purge Unit located at the predetermined position is driven by the predetermined number of pulses after movement toward the home position is started, Purge Position Sensor is not turned ON.
		Remedy	1. Check movement of Purge Unit. 2. Replace Purge Unit. 3. Replace Printer Controller PCB.
06	5E	Title	Purge Unit position error
		Description	When Purge Unit located at the home position is driven by the predetermined number of pulses after movement toward the predetermined position is started, Purge Position Sensor is not turned OFF.
		Remedy	1. Check movement of Purge Unit. 2. Replace Purge Position Sensor. 3. Replace Purge Unit. 4. Replace Printer Controller PCB.
06	63	Title	Purge Unit position error
		Description	When Purge Unit located at the cap position moves to the home position, Home Position Sensor is turned ON before it has been driven by the predetermined number of pulses.
		Remedy	1. Check movement of Purge Unit. 2. Replace Purge Position Sensor. 3. Replace Purge Unit. 4. Replace Printer Controller PCB.
06	64-69	Title	Purge Unit position error
		Description	When Purge Unit located at the predetermined position moves to the home position, Home Position Sensor is turned ON before it has been driven by the predetermined number of pulses.
		Remedy	1. Check movement of Purge Unit. 2. Replace Purge Position Sensor. 3. Replace Purge Unit. 4. Replace Printer Controller PCB.
07: Supply Valve Error			
07	20	Title	Supply Valve error
		Description	When Ink Supply Valve is driven by the predetermined number of pulses after initialization of its position started, Pump Valve Sensor 2 is not turned ON.
		Remedy	1. Check Pump Unit connector. 2. Replace Print Module. 3. Replace Printer Controller PCB.

Code	Detail Code	Item	Description
07	21	Title	Supply Valve error
		Description	When Ink Supply Valve is driven by the predetermined number of pulses after closing of it is started, Pump Valve Sensor 2 is not turned ON.
		Remedy	1. Check Pump Unit connector. 2. Replace Print Module. 3. Replace Printer Controller PCB.
07	22	Title	Supply Valve error
		Description	When Ink Supply Valve is driven by the predetermined number of pulses after opening of it is started, Pump Valve Sensor 2 is not turned OFF.
		Remedy	1. Check Pump Unit connector. 2. Replace Print Module. 3. Replace Printer Controller PCB.
07	23	Title	Supply Valve error
		Description	When Ink Supply Valve (Bk) is driven by the predetermined number of pulses after opening of it is started, Pump Valve Sensor 2 is not turned ON.
		Remedy	1. Check Pump Unit connector. 2. Replace Print Module. 3. Replace Printer Controller PCB.
07	24	Title	Supply Valve error
		Description	When Ink Supply Valve (C) is driven by the predetermined number of pulses after opening of it is started, Pump Valve Sensor 2 is not turned ON.
		Remedy	1. Check Pump Unit connector. 2. Replace Print Module. 3. Replace Printer Controller PCB.
07	25	Title	Supply Valve error
		Description	When Ink Supply Valve (M) is driven by the predetermined number of pulses after opening of it is started, Pump Valve Sensor 2 is not turned ON.
		Remedy	1. Check Pump Unit connector. 2. Replace Print Module. 3. Replace Printer Controller PCB.
07	26	Title	Supply Valve error
		Description	When Ink Supply Valve (Y) is driven by the predetermined number of pulses after opening of it is started, Pump Valve Sensor 2 is not turned ON.
		Remedy	1. Check Pump Unit connector. 2. Replace Print Module. 3. Replace Printer Controller PCB.

Code	Detail Code	Item	Description
07	27	Title	Supply Valve error
		Description	When Ink Supply Valve is driven by the predetermined number of pulses after closing of it is started, Pump Valve Sensor 2 is not turned ON.
		Remedy	1. Check Pump Unit connector. 2. Replace Print Module. 3. Replace Printer Controller PCB.
07	29	Title	Supply Valve error
		Description	When Ink Supply Valve is driven by the predetermined number of pulses after opening of it is started, Pump Valve Sensor 2 is not turned ON.
		Remedy	1. Check Pump Unit connector. 2. Replace Print Module. 3. Replace Printer Controller PCB.
07	31	Title	Supply Valve error
		Description	When Ink Supply Valve is closed, Pump Valve Sensor 2 is turned ON before this valve has been driven by the predetermined number of pulses.
		Remedy	1. Check Pump Unit connector. 2. Replace Print Module. 3. Replace Printer Controller PCB.
07	32	Title	Supply Valve error
		Description	When Suction Valve is opened, Pump Valve Sensor 2 is turned OFF before this valve has been driven by the predetermined number of pulses.
		Remedy	1. Check Pump Unit connector. 2. Replace Print Module. 3. Replace Printer Controller PCB.
07	33	Title	Supply Valve error
		Description	When Ink Supply Valve (Bk) is opened, Pump Valve Sensor 2 is turned ON before this valve has been driven by the predetermined number of pulses
		Remedy	1. Check Pump Unit connector. 2. Replace Print Module. 3. Replace Printer Controller PCB.
07	34	Title	Supply Valve error
		Description	When Ink Supply Valve (C) is opened, Pump Valve Sensor 2 is turned ON before this valve has been driven by the predetermined number of pulses.
		Remedy	1. Check Pump Unit connector. 2. Replace Print Module. 3. Replace Printer Controller PCB.

Code	Detail Code	Item	Description
07	35	Title	Supply Valve error
		Description	When Ink Supply Valve (M) is opened, Pump Valve Sensor 2 is turned ON before this valve has been driven by the predetermined number of pulses.
		Remedy	1. Check Pump Unit connector. 2. Replace Print Module. 3. Replace Printer Controller PCB.
07	36	Title	Supply Valve error
		Description	When Ink Supply Valve (Y) is opened, Pump Valve Sensor 2 is turned ON before this valve has been driven by the predetermined number of pulses.
		Remedy	1. Check Pump Unit connector. 2. Replace Print Module. 3. Replace Printer Controller PCB.
07	71	Title	Supply Valve error
		Description	When Ink Supply Valve is closed, Pump Valve Sensor 2 is not turned ON.
		Remedy	1. Check Pump Unit connector. 2. Replace Print Module. 3. Replace Printer Controller PCB.
07	72	Title	Supply Valve error
		Description	When Suction Valve is opened, Pump Valve Sensor 2 has already been turned ON.
		Remedy	1. Check Pump Unit connector. 2. Replace Print Module. 3. Replace Printer Controller PCB.
07	73	Title	Supply Valve error
		Description	When Suction Valve (Bk) is opened, Pump Valve Sensor 2 has already been turned OFF.
		Remedy	1. Check Pump Unit connector. 2. Replace Print Module. 3. Replace Printer Controller PCB.
07	74	Title	Supply Valve error
		Description	When Suction Valve (C) is opened, Pump Valve Sensor 2 has already been turned OFF.
		Remedy	1. Check Pump Unit connector. 2. Replace Print Module. 3. Replace Printer Controller PCB.
07	75	Title	Supply Valve error
		Description	When Suction Valve (M) is opened, Pump Valve Sensor 2 has already been turned OFF.
		Remedy	1. Check Pump Unit connector. 2. Replace Print Module. 3. Replace Printer Controller PCB.

Code	Detail Code	Item	Description
07	76	Title	Supply Valve error
		Description	When Suction Valve (Y) is opened, Pump Valve Sensor 2 has already been turned OFF
		Remedy	1. Check Pump Unit connector. 2. Replace Print Module. 3. Replace Printer Controller PCB.
07	77	Title	Supply Valve error
		Description	When Ink Supply Valve is closed, Pump Valve Sensor 2 has already been turned OFF.
		Remedy	1. Check Pump Unit connector. 2. Replace Print Module. 3. Replace Printer Controller PCB.
07	79	Title	Supply Valve error
		Description	When Ink Supply Valve is opened, Pump Valve Sensor 2 has already been turned OFF.
		Remedy	1. Check Pump Unit connector. 2. Replace Print Module. 3. Replace Printer Controller PCB.
08: Bubble Removing Valve Error			
08	20	Title	Bubble Removing Valve error
		Description	When Bubble Removing Valve is driven by the predetermined number of pulses after initialization of its position is started, Pump Valve Sensor 1 is not turned ON.
		Remedy	1. Check Pump Unit connector. 2. Replace Print Module. 3. Replace Printer Controller PCB.
08	21	Title	Bubble Removing Valve error
		Description	When Bubble Removing Valve is driven by the predetermined number of pulses after closing of it is started, Pump Valve Sensor 1 is not turned ON.
		Remedy	1. Check Pump Unit connector. 2. Replace Print Module. 3. Replace Printer Controller PCB.
08	23	Title	Bubble Removing Valve error
		Description	When Bubble Removing Valve (Bk) is driven by the predetermined number of pulses after opening of it is started, Pump Valve Sensor 1 is not turned ON.
		Remedy	1. Check Pump Unit connector. 2. Replace Print Module. 3. Replace Printer Controller PCB.

Code	Detail Code	Item	Description
08	24	Title	Bubble Removing Valve error
		Description	When Bubble Removing Valve (C) is driven by the predetermined number of pulses after opening of it is started, Pump Valve Sensor 1 is not turned ON.
		Remedy	1. Check Pump Unit connector. 2. Replace Print Module. 3. Replace Printer Controller PCB.
08	25	Title	Bubble Removing Valve error
		Description	When Bubble Removing Valve (M) is driven by the predetermined number of pulses after opening of it is started, Pump Valve Sensor 1 is not turned ON.
		Remedy	1. Check Pump Unit connector. 2. Replace Print Module. 3. Replace Printer Controller PCB.
08	26	Title	Bubble Removing Valve error
		Description	When Bubble Removing Valve (Y) is driven by the predetermined number of pulses after opening of it is started, Pump Valve Sensor 1 is not turned ON.
		Remedy	1. Check Pump Unit connector. 2. Replace Print Module. 3. Replace Printer Controller PCB.
08	27	Title	Bubble Removing Valve error
		Description	When Bubble Removing Valve is driven by the predetermined number of pulses after opening of it is started, Pump Valve Sensor 1 is not turned ON.
		Remedy	1. Check Pump Unit connector. 2. Replace Print Module. 3. Replace Printer Controller PCB.
08	28	Title	Bubble Removing Valve error
		Description	When Bubble Removing Valve is driven by the predetermined number of pulses after closing of it is started, Pump Valve Sensor 1 is not turned ON.
		Remedy	1. Check Pump Unit connector. 2. Replace Print Module. 3. Replace Printer Controller PCB.
08	31	Title	Bubble Removing Valve error
		Description	When Bubble Removing Valve is closed, Pump Valve Sensor 1 is turned ON before this valve has been driven by the predetermined number of pulses.
		Remedy	1. Check Pump Unit connector. 2. Replace Print Module. 3. Replace Printer Controller PCB.

Code	Detail Code	Item	Description
08	33	Title	Bubble Removing Valve error
		Description	When Bubble Removing Valve (Bk) is closed, Pump Valve Sensor 1 is turned ON before this valve has been driven by the predetermined number of pulses.
		Remedy	1. Check Pump Unit connector. 2. Replace Print Module. 3. Replace Printer Controller PCB.
08	34	Title	Bubble Removing Valve error
		Description	When Bubble Removing Valve (C) is closed, Pump Valve Sensor 1 is turned ON before this valve has been driven by the predetermined number of pulses.
		Remedy	1. Check Pump Unit connector. 2. Replace Print Module. 3. Replace Printer Controller PCB.
08	35	Title	Bubble Removing Valve error
		Description	When Bubble Removing Valve (M) is closed, Pump Valve Sensor 1 is turned ON before this valve has been driven by the predetermined number of pulses.
		Remedy	1. Check Pump Unit connector. 2. Replace Print Module. 3. Replace Printer Controller PCB.
08	37	Title	Bubble Removing Valve error
		Description	When Bubble Removing Valve is opened, Pump Valve Sensor 1 is turned ON before this valve has been driven by the predetermined number of pulses.
		Remedy	1. Check Pump Unit connector. 2. Replace Print Module. 3. Replace Printer Controller PCB.
08	38	Title	Bubble Removing Valve error
		Description	When Bubble Removing Valve is closed, Pump Valve Sensor 1 is turned ON before this valve has been driven by the predetermined number of pulses.
		Remedy	1. Check Pump Unit connector. 2. Replace Print Module. 3. Replace Printer Controller PCB.
08	71	Title	Bubble Removing Valve error
		Description	When Bubble Removing Valve is closed, Pump Valve Sensor 1 has already been turned OFF.
		Remedy	1. Check Pump Unit connector. 2. Replace Print Module. 3. Replace Printer Controller PCB.

Code	Detail Code	Item	Description
08	73	Title	Bubble Removing Valve error
		Description	When Bubble Removing Valve ( ) is opened, Pump Valve Sensor 1 has already been turned ON.
		Remedy	1. Check Pump Unit connector. 2. Replace Print Module. 3. Replace Printer Controller PCB.
08	74	Title	Bubble Removing Valve error
		Description	When Bubble Removing Valve (C) is opened, Pump Valve Sensor 1 has already been turned ON.
		Remedy	1. Check Pump Unit connector. 2. Replace Print Module. 3. Replace Printer Controller PCB.
08	75	Title	Bubble Removing Valve error
		Description	When Bubble Removing Valve (M) is opened, Pump Valve Sensor 1 has already been turned ON.
		Remedy	1. Check Pump Unit connector. 2. Replace Print Module. 3. Replace Printer Controller PCB.
08	76	Title	Bubble Removing Valve error
		Description	When Bubble Removing Valve (Y) is opened, Pump Valve Sensor 1 has already been turned ON.
		Remedy	1. Check Pump Unit connector. 2. Replace Print Module. 3. Replace Printer Controller PCB.
08	77	Title	Bubble Removing Valve error
		Description	When Bubble Removing Valve is opened, Pump Valve Sensor 1 has already been turned ON.
		Remedy	1. Check Pump Unit connector. 2. Replace Print Module. 3. Replace Printer Controller PCB.
08	78	Title	Bubble Removing Valve error
		Description	When Bubble Removing Valve is closed, Pump Valve Sensor 1 has already been turned ON.
		Remedy	1. Check Pump Unit connector. 2. Replace Print Module. 3. Replace Printer Controller PCB.

Code	Detail Code	Item	Description
09: Suction Pump Error			
09	12-15 *1	Title	Ink Level Sensor does not detect ink.
		Description	When ink height adjustment or ink flow path bubble removal is performed for 180 seconds, Ink Level Sensor is not turned ON.
		Remedy	1. Check ink leakage from ink flow paths. 2. Check Printhead. 3. Check Flexible Cable. 4. Replace Printhead. 5. Replace Printhead Relay PCB. 6. Replace Flexible Cable. 7. Replace Printer Controller PCB.
09	16-19 *2	Title	Ink Level Sensor does not detect air.
		Description	When Pump is driven for 60 seconds for ink height adjustment, Ink Level Sensor is not turned OFF.
		Remedy	1. Check ink leakage from ink flow paths. 2. Replace Print Module. 3. Replace Printer Controller PCB.
09	1A	Title	Pressure does not become lower
		Description	When Pump is driven for 60 seconds with all valves closed, Pressure Sensor value does not decrease to the predetermined one.
		Remedy	1. Check ink leakage from ink flow paths. 2. Replace Print Module. 3. Replace Printer Controller PCB.
09	22-25 *1	Title	Pressure does not change.
		Description	When ink height adjustment or ink flow path bubble removal is performed, the state where Pressure Sensor value changes by ± 2kPa is maintained for 90 seconds.
		Remedy	1. Check ink leakage from ink flow paths. 2. Check Printhead. 3. Check Flexible Cable. 4. Replace Printhead. 5. Replace Printhead Relay PCB. 6. Replace Flexible Cable. 7. Replace Printer Controller PCB.

Code	Detail Code	Item	Description
09	26-29 *2	Title	Pressure does not change.
		Description	When ink height adjustment or ink flow path bubble removal is performed, the state where Pressure Sensor value changes by ± 2kPa is maintained for 60 seconds
		Remedy	1. Check ink leakage from ink flow paths. 2. Check Printhead. 3. Check Flexible Cable. 4. Replace Printhead. 5. Replace Printhead Relay PCB. 6. Replace Flexible Cable. 7. Replace Printer Controller PCB.
09	2A	Title	Pressure does not become lower.
		Description	When pump suction is performed for the predetermined period of time, Pressure Sensor value does not decrease to less than the predetermined value.
		Remedy	1. Check ink leakage from ink flow paths. 2. Replace Print Module. 3. Replace Printer Controller PCB.
09	2B	Title	Pressure does not become higher.
		Description	When Pump is driven for pressurization for 300 seconds with all valves closed, Pressure Sensor value does not increase to more than the predetermined value.
		Remedy	1. Check ink leakage from ink flow paths. 2. Replace Print Module. 3. Replace Printer Controller PCB.
09	32-35 *1	Title	Pressure becomes lower too fast.
		Description	While Pump is being driven for suction, Pressure Sensor value decreases to less than -40kPa before Ink Level Sensor is turned ON.
		Remedy	1. Check ink leakage from ink flow paths. 2. Replace Print Module. 3. Replace Printer Controller PCB.
09	36-39 *2	Title	Pressure becomes higher too fast.
		Description	While Pump is being driven for pressurization, Pressure Sensor value increases to more than +25kPa before Ink Level Sensor is turned OFF.
		Remedy	1. Check ink leakage from ink flow paths. 2. Replace Print Module. 3. Replace Printer Controller PCB.
09	41-4B *3	Title	Supply Valve status error when driving Pump (dragging)
		Description	When Pump is driven with Pump Valve Sensor 2 turned OFF, this sensor is turned ON.
		Remedy	1. Replace Print Module. 2. Replace Printer Controller PCB.

Code	Detail Code	Item	Description
09	51-5B *3	Title	Supply Valve status error when driving Pump (dragging)
		Description	When Pump is driven with Pump Valve Sensor 2 turned ON, this sensor is turned OFF.
		Remedy	1. Replace Print Module. 2. Replace Printer Controller PCB.
09	61-6B *3	Title	Bubble Removing Valve status error when driving Pump (dragging)
		Description	When Pump is driven with Pump Valve Sensor 1 turned ON, this sensor is turned OFF.
		Remedy	1. Replace Print Module. 2. Replace Printer Controller PCB.
09	71-7B *3	Title	Bubble Removing Valve status error when driving Pump (dragging)
		Description	When Pump is driven with Pump Valve Sensor 1 turned OFF, this sensor is turned ON.
		Remedy	1. Replace Print Module. 2. Replace Printer Controller PCB.
09	Remarks	*1: The last digit indicates the color. 2: BK, 3: C, 4: M, 5:Y *2: The last digit indicates the color. 6: BK, 7: C, 8: M, 9:Y *3: The last digit indicates the Pump drive type. • 1 : Driven without sensor detection • 2 : Driven on Ink Level Sensor detection (BK) • 3 : Driven on Ink Level Sensor detection (C) • 4 : Driven on Ink Level Sensor detection (M) • 5 : Driven on Ink Level Sensor detection (Y) • 6 : Driven on Ink Level Sensor detection (Bk) • 7 : Driven on Ink Level Sensor detection (C) • 8 : Driven on Ink Level Sensor detection (M) • 9 : Driven on Ink Level Sensor detection (Y) • A : Pressure Sensor under detection • B : Pressure Sensor excess detection	
0F: Printhead Overheat			
0F	01-0F *4	Title	Printheads are overheated. If used further, Printheads will be damaged.
		Description	After Printhead cool down Printhead Temperature Sensor is 75 degrees Celsius or more.
		Remedy	Replace Printheads.

Code	Detail Code	Item	Description
10: Printhead Ink Level Sensor Error			
10	01-0F *4	Title	Ink Upper Limit Sensor detected while Ink Lower Limit Sensor did not.
		Description	When Ink Lower Limit Sensor is held OFF, Ink Upper Limit Sensor is turned ON.
		Remedy	1. Check Printhead. 2. Check Flexible Cable. 3. Replace Printhead. 4. Replace Printhead Relay PCB. 5. Replace Flexible Cable. 6. Replace Printer Controller PCB.
11: Printhead Subheater Error			
11	01-0F *4	Title	Specified temperature is not reached even though Subheater is running
		Description	Printhead Temperature Sensor does not increase by 5 degrees Celsius when the subheater is operated for 10 seconds during the subheater temperature adjustment. Or, Printhead Temperature Sensor does not increase to the predetermined value when the subheater is operated for 120 seconds.
		Remedy	1. Check Printhead. 2. Check Flexible Cable. 3. Replace Printhead. 4. Replace Printhead Relay PCB. 5. Replace Flexible Cable. 6. Replace Printer Controller PCB.
12: Printhead Connection Error			
12	01-0F *4	Title	Printhead connection error
		Description	When Printer is initialized, EEPROM of Printhead is not accessed.
		Remedy	1. Check Printhead. 2. Check Flexible Cable. 3. Replace Printhead. 4. Replace Printhead Relay PCB. 5. Replace Flexible Cable. 6. Replace Printer Controller PCB. 7. Replace Print Module.
13: Printhead Data Error			
13	01-0F *4	Title	Printhead EEPROM data error
		Description	When Printer is initialized, a checksum error occurred in EEPROM of Printhead.
		Remedy	1. Replace Printheads. 2. Replace Printer Controller PCB.

Code	Detail Code	Item	Description
14: Printhead ID Error 1			
14	01-0F *4	Title	Correct Printhead is not installed.
		Description	When Printer is initialized, Printhead of non-compatible color is found to be installed.
		Remedy	Install correct Printhead.
15: Ink Leakage			
15	01	Title	Ink is leaking.
		Description	Ink Leakage Sensor has been turned ON.
		Remedy	Locate ink leakage and replace unit in question.
17: Purge Unit life			
17	01	Title	Purge Unit life
		Description	When Printer is initialized, shut down, or the job ends, the wipe count of Purge Unit has reached 7001 (end of service life).
		Remedy	Replace Purge Unit.
18: Blade Cleaner Life			
18	01	Title	Blade Cleaner life
		Description	When Printer is initialized, shut down, or the job ends, the wipe count of Purge Unit has reached 7001 (end of service life).
		Remedy	Replace Blade Cleaner.
19: Printhead Temperature Sensor Error			
19	01-0F *4	Title	Printhead Temperature Sensor is damaged.
		Description	Printhead Temperature Sensor is not obtained within 10 seconds after start of Printer initialization or the subheater temperature adjustment. Or, Printhead Temperature Sensor before the subheater temperature adjustment is lower than -10 degrees Celsius or higher than 90 degrees Celsius.
		Remedy	1. Check Printhead. 2. Check Flexible Cable. 3. Replace Printhead. 4. Replace Printhead Relay PCB. 5. Replace Printhead Flexible Cable. 6. Replace Printer Controller PCB.
1B: Printhead Flexible Cable Connection Error			
1B	01-0F *4	Title	Printhead Flexible Cable is not connected correctly.
		Description	When Printer is initialized, 5.0V for Printhead is turned ON, or 24V for Printhead is turned OFF, Printhead Flexible Cable is not connected.
		Remedy	1. Check Printhead. 2. Check Flexible Cable. 3. Replace Printheads. 4. Replace Printhead Relay PCB. 5. Replace Flexible Cable. 6. Replace Printer Controller PCB.

Code	Detail Code	Item	Description
1E: Printhead ID Error 2			
1E	01-0F *4	Title	Correct Printhead is not installed.
		Description	When Printer is initialized, the wrong Printhead was connected to Printer.
		Remedy	Install correct Printhead.
22: Cutter HP Sensor Error			
22	01	Title	Cutter is not located at the home position.
		Description	At the time when Cutter Solenoid has turned ON, Cutter HP Sensor is not turned ON.
		Remedy	1. Check Cutter HP Sensor connector. 2. Replace Cutter HP Sensor. 3. Replace Cutter Motor. 4. Replace Cutter Driver PCB. 5. Replace Cutter Unit. 6. Replace Printer Controller PCB.
22	02	Title	Output of Cutter HP Sensor does not change.
		Description	After Cutter Solenoid is turned ON, Cutter HP Sensor does not change its output to ON and OFF.
		Remedy	1. Check Cutter HP Sensor connector. 2. Replace Cutter HP Sensor. 3. Replace Cutter Solenoid. 4. Replace Cutter Motor. 5. Replace Cutter Driver PCB. 6. Replace Cutter Unit. 7. Replace Printer Controller PCB.
24: Climate Sensor not Connected			
24	01	Title	Climate Sensor is not connected.
		Description	When Printer is initialized, Temperature/Humidity Sensor data is erroneous.
		Remedy	1. Check Climate Sensor connector. 2. Replace Climate Sensor. 3. Replace Printer Controller PCB.
25: Paper Suction Fan Error			
25	01	Title	Paper Suction Fan is faulty or not connected.
		Description	When Paper Suction Fan is operated for 8 seconds, a Suction Fan lock signal has been detected 10 times at intervals of 1 ms.
		Remedy	1. Check for a clogged fan. 2. Check Suction Fan connector. 3. Replace Suction Fan. 4. Replace Printer Controller PCB.

Code	Detail Code	Item	Description
26: Power Supply Fan Error			
26	01	Title	Power Supply Fan is faulty or not connected.
		Description	When Power Supply Fan (12V) is operated for 3 seconds, Power Supply Fan lock signal has been detected 10 times at intervals of 1 ms.
		Remedy	1. Check for a clogged fan. 2. Check Power Supply Fan connector. 3. Replace Power Supply Fan. 4. Replace Printer Controller PCB.
26	02	Title	Power Supply Fan is faulty or not connected.
		Description	When Power Supply Fan (24V) is operated for 1 seconds, Power Supply Fan lock signal has been detected 10 times at intervals of 1 ms.
		Remedy	1. Check for a clogged fan. 2. Check Power Supply Fan connector. 3. Replace Power Fan. 4. Replace Printer Controller PCB.
28: Printhead ID Error 3			
28	01-0F *4	Title	Type (dye/pigment) of ink in Printhead is different.
		Description	When Printer is initialized, Printer ink type is different from Printhead ink type.
		Remedy	Replace Printhead.
29: Wipe Valve Error			
29	20	Title	Wipe Valve position error
		Description	When Wipe Valve is driven by 200 pulses during initialization, Wipe Valve Sensor is not turned OFF.
		Remedy	1. Check Wipe Valve Sensor connector. 2. Check Valve Motor connector. 3. Replace Wipe Valve Sensor. 4. Replace Valve Motor. 5. Replace Valve Unit.
29	21	Title	Wipe Valve position error
		Description	When Wipe Valve is driven by 100 pulses during its closing, Wipe Valve Sensor is not turned ON.
		Remedy	1. Check Valve Motor connector. 2. Replace Valve Motor. 3. Replace Valve Unit.
29	22	Title	Wipe Valve position error
		Description	When Wipe Valve is driven by 100 pulses during its opening, Wipe Valve Sensor is not turned ON.
		Remedy	1. Check Wipe Valve Sensor connector. 2. Check Valve Motor connector. 3. Replace Wipe Valve Sensor. 4. Replace Valve Motor. 5. Replace Valve Unit.

Code	Detail Code	Item	Description
29	23	Title	Wipe Valve position error
		Description	When Wipe Valve is driven by 100 pulses during its shutdown, Wipe Valve Sensor is not turned ON.
		Remedy	1. Check Wipe Valve Sensor connector. 2. Check Valve Motor connector. 3. Replace Wipe Valve Sensor. 4. Replace Valve Motor. 5. Replace Valve Unit.
29	7F	Title	Wipe Valve position error
		Description	Immediately after initialization of Wipe Valve, Wipe Valve Sensor is turned ON.
		Remedy	1. Check Wipe Valve Sensor connector. 2. Check Valve Motor connector. 3. Replace Wipe Valve Sensor. 4. Replace Valve Motor. 5. Replace Valve Unit.
2A: Transport Unit life			
2A	01	Title	Lifetime of Transport Unit has expired. (Printer stops)
		Description	When Printer is initialized, shut down or the job ends, dot count of Printheads has reached the lifetime of Transport Unit.
		Remedy	Replace Transport Unit.
2C: Printhead of the Fuse to Be Blown			
2C	01-0F *4	Title	Printhead of the fuse to be blown
		Description	When 5V for Printhead is turned ON with 5V fuse of Printer Controller PCB blown, blown fuse signal is turned ON.
		Remedy	CAUTION: • Before replacing parts, check the connections between Printer Controller PCB and Printhead. • Without checking the connections, the fuse may blow again. When “void *1” is generated in the printed image: 1. Replace both Printer Controller PCB and Printhead. • If the fuse is blown and test printing is not possible, replace the heads of all colors. 2. Replace DC Power Supply PCB Unit. • When the power line in Printhead is shorted, it is highly possible that void is generated and fuse of Printer Controller PCB blows again. • When only Printer Controller PCB is replaced, it is highly possible that fuse blows again. Be sure to replace both Printer Controller PCB and Printhead together. 1 For “void”, refer to . When the printed image is free of problem: 1. Replace Printer Controller PCB. 2. Replace DC Power Supply PCB Unit.

NOTE:
*4: The last digit indicates the color.
1:Bk, 2:C, 3:Bk/C, 4:M, 5:Bk/M, 6:C/M, 7:Bk/C/M, 8:Y, 9: Bk/Y, A:C/Y, B:Bk/C/Y, C:M/Y, D:Bk/M/Y, E:C/M/Y, F:Bk/C/M/Y

Code	Detail Code	Item	Description
2D: Printhead Pressure Error 1			
2D	12-15 *5	Title	Ink Supply Error (within 5 years after installation)
		Description	When ink height adjustment or ink flow path bubble removal is performed for 180 seconds in the case cleaning occurs frequently, Ink Level Sensor is not turned ON.
		Remedy	1. Replace Printhead. 2. Check ink leakage from ink flow paths. 3. Replace Pump Unit. 4. Replace Printer Controller PCB.
2D	22-25 *5	Title	Pump Pressure Error (within 5 years after installation)
		Description	The state where Pressure Sensor value changes by ± 2kPa is maintained for 90 seconds in the case cleaning occurs frequently.
		Remedy	1. Replace Printhead. 2. Check ink leakage from ink flow paths. 3. Replace Pump Unit. 4. Replace Printer Controller PCB.
2D	32-35 *5	Title	Pump Pressure Error (within 5 years after installation)
		Description	Pressure Sensor value decreases to less than -40kPa before Ink Level Sensor is turned ON in the case cleaning occurs frequently.
		Remedy	1. Replace Printhead. 2. Check ink leakage from ink flow paths. 3. Replace Pump Unit. 4. Replace Printer Controller PCB.
2E: Printhead Pressure Error 2			
2E	12-15 *5	Title	Ink Supply Error (more than 5 years after installation)
		Description	When ink height adjustment or ink flow path bubble removal is performed for 180 seconds in the case cleaning occurs frequently, Ink Level Sensor is not turned ON.
		Remedy	1. Replace Printhead. 2. Check ink leakage from ink flow paths. 3. Replace Pump Unit. 4. Replace Printer Controller PCB.

Code	Detail Code	Item	Description
2E	22-25 *5	Title	Pump Pressure Error (more than 5 years after installation)
		Description	The state where Pressure Sensor value changes by ± 2kPa is maintained for 90 seconds in the case cleaning occurs frequently.
		Remedy	1. Replace Printhead. 2. Check ink leakage from ink flow paths. 3. Replace Pump Unit. 4. Replace Printer Controller PCB.
2E	32-35 *5	Title	Pump Pressure Error (more than 5 years after installation)
		Description	Pressure Sensor value decreases to less than -40kPa before Ink Level Sensor is turned ON in the case cleaning occurs frequently.
		Remedy	1. Check ink leakage from ink flow paths. 2. Replace Pump Unit. 3. Replace Printer Controller PCB.
F0: System Error			
F0	01-14	Title	System Error
		Description	Firmware performed unexpected control.
		Remedy	Turn off and then on Printer.

NOTE:
*5: The last digit indicates the color. 2 : Bk, 3 : C, 4 : M, 5 : Y

Operator Call Error

Code	Detail Code	Item	Description
01: Upper Unit Open			
01	01	Title	Upper Unit is opened.
		Description	Upper Unit Safety Switch is held OFF.
		Remedy	Close Upper Unit.
02: Ink Tank Door Open			
02	01	Title	Ink Tank Door is opened
		Description	Ink Tank Door Sensor is held OFF.
		Remedy	Close Ink Tank Door.
03: Maintenance Cartridge Door Open			
03	01	Title	Maintenance Cartridge Door is opened.
		Description	Maintenance Cartridge Door Sensor is held OFF.
		Remedy	Close Maintenance Cartridge Door.
05: Paper Guide Open			
05	01	Title	Paper Guide is not set on the paper.
		Description	Beginning of printing or during printing, Paper Set Sensor is held OFF.
		Remedy	Set Paper Guide properly on the paper.
07: Cutter Cover Open			
07	01	Title	Cutter Cover is opened.
		Description	Upper Door Switch of Cutter Unit is held OFF.
		Remedy	Close Cutter Cover.
09: Roll Cover Open			
09	01	Title	Roll Cover is opened.
		Description	Roll Cover Sensor is held OFF.
		Remedy	Close Roll Cover.
10: Paper Out Error			
10	01	Title	Paper out
		Description	When Printer is initialized, during printing, or when paper is set, Trailing Edge Sensor is held OFF.
		Remedy	1. Load paper and close Paper Guides (error cleared). 2. Reset the print data and cancel the job.
10	02	Title	Paper not fed
		Description	When paper is fed 20mm or more than the predetermined distance after printing is started with TOF sensor held OFF, this sensor is not turned ON.
		Remedy	Load paper and close Paper Guides (error cleared).

Code	Detail Code	Item	Description
11: Paper Vertical Size Error			
11	02	Title	Paper of a size smaller than print data is loaded.
		Description	During printing, TOF Sensor detected paper which is at least 3mm shorter than print data.
		Remedy	1. Load paper with correct size and close Paper Guides (error cleared). 2. Cancel the job. ・Service Utility > Printer Status > Cancel All Jobs
11	03	Title	Paper of a size smaller than print data is loaded.
		Description	Before printing on the current paper is completed, the next paper has arrived at the printing start position. Or, preprocessing is not completed beginning of printing.
		Remedy	1. Load paper with correct size and close Paper Guides (error cleared). 2. Cancel the job. ・Service Utility > Printer Status > Cancel All Jobs
11	04	Title	Shorter paper size than print data is loaded.
		Description	During printing, Cutter TOF Sensor detected paper which is at least 8mm shorter than print data.
		Remedy	1. Load paper with correct size and close Paper Guides (error cleared). 2. Cancel the job. ・Service Utility > Printer Status > Cancel All Jobs
12: Paper Width Size Error			
12	01	Title	Paper of correct width is not loaded.
		Description	Beginning of printing, Paper Width Sensor has detected paper which is at least 5mm narrower than print data. Or, during printing of a vertical magnification correction pattern, Paper Width Sensor has detected paper which is at least 5mm wider or narrower than print data.
		Remedy	1. Load paper with correct size and close Paper Guides (error cleared). 2. Cancel the job. ・Service Utility > Printer Status > Cancel All Jobs
13: Paper Jam Error			
13	01	Title	TOF Sensor could not detect the next TOF mark or label gap.
		Description	During printing or when printing is started with TOF Sensor held ON, this sensor detected paper which is at least 20mm longer than print data.
		Remedy	1. Remove jammed paper around TOF Sensor. 2. Load paper with correct size. 3. Close Paper Guide (error cleared).

Code	Detail Code	Item	Description
13	02	Title	TOF Sensor could not detect the next TOF mark or label gap.
		Description	When printing is started with TOF Sensor detected the paper after pre-printing backfeed, TOF Sensor has detected paper which is at least 20mm longer than print data.
		Remedy	1. Remove jammed paper around TOF Sensor. 2. Load paper with correct size. 3. Close Paper Guide (error cleared).
13	04	Title	Paper detected by TOF Sensor cannot be detected by Cutter TOF Sensor.
		Description	During printing, Cutter TOF Sensor is not turned ON even when paper has been fed by the predetermined amount after TOF Sensor was turned ON.
		Remedy	1. Close Paper Guide (error cleared).
13	05	Title	Cutter TOF Sensor could not detect the next TOF mark or label gap.
		Description	During printing, Cutter TOF Sensor detected paper which is at least 20mm longer than print data.
		Remedy	1. Remove jammed paper around Cutter TOF Sensor. 2. Load paper with correct size. 3. Close Paper Guide (error cleared).
13	06	Title	Cutter TOF Sensor could not detect the leading edge of each page.
		Description	During printing, Cutter TOF Sensor has detected the following paper. • Gap is 20mm wider or more. • Mark is 2mm wider or more.
		Remedy	1. Remove jammed paper around Cutter TOF Sensor. 2. Load paper with correct gap and mark lengths. 3. Close Paper Guide (error cleared).
13	09	Title	Transport Sensor 1 did not respond.
		Description	When paper is fed 42.4mm during printing, Transport Sensor 1 does not change its output to ON and OFF.
		Remedy	1. Remove jammed paper from Transport Unit or Roll Drive Unit, set paper and close Paper Guide (error cleared). 2. Replace Transport Sensor 1.
13	0B	Title	Paper is folded around Delivery Port.
		Description	During printing, Transfer Sensor 2 was held ON for 0.5 second or more.
		Remedy	1. Remove jammed paper around Delivery Port, set paper and Close Paper Guide (error cleared). 2. Replace Transport Sensor 2.

Code	Detail Code	Item	Description
13	0C	Title	Paper is ready for printing too early.
		Description	When paper arrives at the printing start position during printing, Printhead is not at print position.
		Remedy	1. Clean Transport Belt. 2. Adjust the pulling speed for the peeler, the take-up device and so on. 3. Close Paper Guides (error cleared).
13	E1	Title	Encoder signal is not received correctly.
		Description	When Transport Motor is driven for 1 second during printing, Encoder signal input ratio is 1% or less of the predetermined value.
		Remedy	1. Remove jammed paper from transport area. 2. Check connection of Encoder. 3. Check connection of Transport Motor connector. 4. Replace Encoder. 5. Replace Encoder Sensor. 6. Replace Transport Motor. 7. Replace Transport Unit.
13	E2	Title	Encoder signal is not received correctly.
		Description	When Transport Motor is driven for longer than 1 second during printing, Encoder signal input ratio is 90% or less of the predetermined value.
		Remedy	1. Remove jammed paper from transport area. 2. Check connection of Encoder. 3. Check connection of Transport Motor connector. 4. Replace Encoder. 5. Replace Encoder Sensor. 6. Replace Transport Motor. 7. Replace Transport Unit.
14: Gap Mark Length Error			
14	02	Title	Paper with too narrow gap or mark is loaded.
		Description	During printing, TOF Sensor has detected a mark which is at least 2mm narrower than the setting value.
		Remedy	1. Load paper with correct gap or mark lengths, and close Paper Guides (error cleared). 2. Cancel the job. • Service Utility > Printer Status > Cancel All Jobs
14	03	Title	TOF Sensor could not detect the leading edge of paper.
		Description	During printing, TOF Sensor has detected the paper below. • Gap is 20mm wider or more. • Mark is 2mm wider or more
		Remedy	1. Load paper with correct gap or mark lengths, and close Paper Guides (error cleared). 2. Cancel the job. • Service Utility > Printer Status > Cancel All Jobs

Code	Detail Code	Item	Description
19: Paper Loading Error			
19	01	Title	Paper is not fed.
		Description	When paper is fed for 5 seconds during paper setting, TOF Sensor does not change its output to ON and OFF.
		Remedy	1. Load paper correctly and close Paper Guide (error cleared). 2. Replace TOF Sensor
19	02	Title	Automatic adjustment of TOF is failed.
		Description	Automatic adjustment of Cutter TOF Sensor failed 3 times.
		Remedy	1. Load paper correctly and close Paper Guide(error cleared). 2. Replace TOF Sensor
19	03	Title	Automatic adjustment of Cutter TOF Sensor is failed.
		Description	Automatic adjustment of Cutter Unit failed 3 times.
		Remedy	1. Load paper correctly and close Paper Guide (error cleared). 2. Replace Cutter TOF Sensor
19	04	Title	Paper Guide opens during paper setting.
		Description	During paper setting, Paper Set Sensor has been turned OFF.
		Remedy	1. Close Paper Guide (error cleared). 2. Replace Paper Set Sensor
19	05	Title	Automatic adjustment of Cutter TOF Sensor cannot be performed because paper does not reach Cutter TOF Sensor.
		Description	Paper does not reach Cutter TOF Sensor within a specific period of time during its automatic adjustment.
		Remedy	Remove jammed paper from transport area.
1D: Paper Jam Error 2			
1D	09	Title	Transport Sensor 1 does not respond.
		Description	When paper is fed by 42.4mm during an operation other than printing, Transport Sensor 1 does not change its output from OFF to ON.
		Remedy	1. Remove jammed paper from Transport Unit or Roll Drive Unit, set paper and close Paper Guide (error cleared). 2. Replace Transport Sensor 1.
1D	0B	Title	Paper is folded around Delivery Port.
		Description	When paper is fed during an operation other than printing, Transfer Sensor 2 was held ON for 0.5 second.
		Remedy	1. Remove jammed paper around Delivery Port. 2. Replace Transport Sensor 2.

Code	Detail Code	Item	Description
1D	11	Title	TOF Sensor could not detect marks during initialization of the paper position.
		Description	When paper is fed by 20mm during initialization of the paper position, TOF Sensor is not turned ON.
		Remedy	1. Remove jammed paper. 2. Replace TOF Sensor.
1D	12	Title	TOF Sensor could not detect marks during initialization of the paper position.
		Description	When paper is fed by 20mm backward during initialization of the paper position, TOF Sensor is not turned OFF.
		Remedy	1. Remove jammed paper. 2. Replace TOF Sensor.
1D	E1	Title	Encoder signal is not detected correctly.
		Description	When Transport Motor is driven for 1 second during preprinting transport, Encoder signal input ratio is 1% or less of the predetermined value.
		Remedy	1. Remove jammed paper from transport area. 2. Check connection of Encoder. 3. Check connection of Transport Motor connector. 4. Replace Encoder. 5. Replace Encoder Sensor. 6. Replace Transport Motor. 7. Replace Transport Unit.
1D	E2	Title	Encoder signal is not detected correctly.
		Description	When Transport Motor is driven for more than 1 second during pre-printing transport, Encoder signal input ratio is 90% or less of the predetermined value.
		Remedy	1. Remove jammed paper from transport area. 2. Check connection of Encoder. 3. Check connection of Transport Motor connector. 4. Replace Encoder. 5. Replace Encoder Sensor. 6. Replace Transport Motor. 7. Replace Transport Unit.
20: Ink Empty			
20	01-0F *1	Title	Ink Tank is empty.
		Description	During Printer initialization, cleaning, printing, or error resetting, Remaining Ink Sensor has been turned OFF.
		Remedy	1. Replace with a new Ink Tank. 2. Close all Covers. (error cleared).

Code	Detail Code	Item	Description
21: Ink Tank Installation Error			
21	01-0F *1	Title	Ink Tank is not installed correctly.
		Description	When Printer is initialized with Ink Tank Door Sensor held ON, EEPROM is not accessed.
		Remedy	1. Install Ink Tank again, or replace with a new Ink Tank. 2. Close all Covers (error cleared).
22: Ink Tank Data Error			
22	01-0F *1	Title	Ink Tank data error
		Description	When Printer is initialized with Ink Tank Door closed, Ink Tank EEPROM checksum value is invalid.
		Remedy	1. Install a new Ink Tank. 2. Close all Covers (error cleared).
23: Maintenance Cartridge Full			
23	01	Title	Maintenance Cartridge is full.
		Description	Maintenance Cartridge Conduction Sensor has been turned ON.
		Remedy	1. Replace with a new Maintenance Cartridge. 2. Close all Covers (error cleared).
24: Maintenance Cartridge Installation Error			
24	01	Title	Maintenance Cartridge is not installed correctly.
		Description	When Printer is initialized with Maintenance Cartridge Door closed, EEPROM of Maintenance Cartridge is not accessed.
		Remedy	1. Install Maintenance Cartridge again or replace with a new Maintenance Cartridge. 2. Close all Covers (error cleared).
25: Maintenance Cartridge Data Error			
25	01	Title	Maintenance Cartridge data error
		Description	When Printer is initialized with Maintenance Cartridge Door closed, the EEPOM data checksum value is invalid.
		Remedy	1. Replace with a new Maintenance Cartridge. 2. Close all Covers (error cleared).
26: Ink Tank ID Error			
26	01-0F *1	Title	Correct Ink Tank is not installed.
		Description	When Printer is initialized with Ink Tank Door closed, Ink Tank ID does not match Printer.
		Remedy	1. Replace with a correct Ink Tank. 2. Close all Covers (error cleared).
27: Ink Tank Type Error			
27	01-0F *1	Title	Correct Ink Tank is not installed.
		Description	When Printer is initialized with Ink Tank Door closed, Ink Tank color information does not match Printer.
		Remedy	1. Replace with a correct Ink Tank. 2. Close all Covers (error cleared).

Code	Detail Code	Item	Description
2B: Maintenance Cartridge Full (2)			
2B	01	Title	Maintenance Cartridge is full.
		Description	Beginning/after cleaning is performed or the power is turned ON with Maintenance Cartridge Door closed, waste ink quantity measured through dot counting has reached 450ml.
		Remedy	1. Replace with a new Maintenance Cartridge. 2. Close all Covers (error cleared).
2D: Ink Tank Type Error			
2D	01-0F *1	Title	Correct Ink Tank is not installed.
		Description	When Printer is initialized with Ink Tank Door closed, the installed Ink Tank type (dye/pigment) does not match Printer.
		Remedy	1. Replace with a correct Ink Tank. 2. Close all Covers (error cleared).
2E: Ink Tank Destination Error			
2E	01-0F *1	Title	Correct Ink Tank is not installed.
		Description	When Printer is initialized with Ink Tank Door closed, the installed Ink Tank type (shipping destination) does not match Printer.
		Remedy	1. Replace with a correct Ink Tank. 2. Close all Covers (error cleared).
2F: Maintenance Cartridge Type Error			
2F	01	Title	Correct Maintenance Cartridge is not installed.
		Description	When Printer is initialized with Maintenance Cartridge Door closed, the installed Maintenance Cartridge type (dye/pigment) does not match Printer.
		Remedy	1. Replace with a correct Maintenance Cartridge. 2. Close all Covers (error cleared).
30: Update Error			
30	01	Title	Firmware update failure.
		Description	During firmware update, erasing error, verification error, and checksum error on Flash ROM has occurred.
		Remedy	1. Retry the firmware update. 2. Replace Printer Controller PCB.
30	02	Title	Firmware update failure.
		Description	During firmware update, an update file for different model has been sent.
		Remedy	Send proper update file.
30	03	Title	Updater started upon detecting the firmware error.
		Description	During Printer startup, a firmware checksum error has occurred.
		Remedy	Retry the firmware update.

Code	Detail Code	Item	Description
30	04	Title	Media parameter version not updated to the latest.
		Description	During Printer startup, the firmware version does not match the version of paper parameter.
		Remedy	Update to the latest version of media parameter information.
31: Data Error			
31	01	Title	Invalid data received from host computer.
		Description	During data reception, the data size does not match Printer.
		Remedy	Cancel the job. • Service Utility > Printer Status > Cancel All Jobs
31	02	Title	Invalid data received from host computer.
		Description	Received data is as follows: • The data format does not match Printer. • The print area width size does not match the print area width byte size. • The paper type does not match Printer. • The left or right margin is too small. • Print data width is too large. • The output resolution does not match Printer. • Printing cannot be done with this combination of input and output resolutions. • The paper length does not conform to the specifications. • The paper width does not conform to the specifications. • The top or bottom margin is less than 1.5mm. • The mark length is not within the range from 3mm to 10mm. • The gap length is not within the range from 2.5mm to 9.5mm. • The color identification command is invalid.
		Remedy	Cancel the job. • Service Utility > Printer Status > Cancel All Jobs
31	03	Title	Form data that cannot be saved was received.
		Description	The received form data does not match Printer.
		Remedy	Cancel the job. • Service Utility > Printer Status > Cancel All Jobs
31	04	Title	Data different from the paper shape that had been set from host computer was received.
		Description	When printing is done with “Continuous (no TOF)” selected, TOF Sensor has been turned OFF. Label/gap paper or tag hole paper was used.
		Remedy	Cancel the job. • Service Utility > Printer Status > Cancel All Jobs

Code	Detail Code	Item	Description
32: Memory Full			
32	01	Title	Form data is not saved.
		Description	The received form data is larger than the remaining form data storage area size.
		Remedy	Cancel the job. • Service Utility > Printer Status > Cancel All Jobs
34: Overlay ID Error			
34	01	Title	Invalid form ID is specified.
		Description	The form ID specified for overlay print data reception is not registered.
		Remedy	Cancel the job. • Service Utility > Printer Status > Cancel All Jobs
37: Remaining Ink Detection Error			
37	01-0F *1	Title	Proper Ink Tank is not installed.
		Description	When ink is used, the power is turned ON, or Ink Tank is replaced, the dot count has reached 150% of the Ink Tank capacity.
		Remedy	1. Set proper Ink Tank. 2. Close all Covers (error cleared).

NOTE:
*1: The last digit indicates the color.
1: Bk, 2:C, 3:Bk/C, 4:M, 5:Bk/M, 6:C/M, 7:Bk/C/M, 8:Y, 9: Bk/Y, A:C/Y, B:Bk/C/Y, C:M/Y, D:Bk/ M/Y, E:C/M/Y, F:Bk/C/M/Y

Warning

Code	Detail Code	Item	Description
01: Remaining Ink Warning			
01	01-0F *1	Title	Ink running out soon.
		Description	When Printer is initialized, printing is done, or cleaning is done, the used ink quantity has reached 184ml (80% of capacity).
		Remedy	1. Replace with a new Ink Tank. 2. Close all Covers (warning cleared).
04: Maintenance Cartridge Warning			
04	01	Title	Maintenance Cartridge soon full.
		Description	When Printer is initialized, printing is done, or cleaning is done with Maintenance Cartridge closed, waste ink quantity has reached 360ml (80% of capacity).
		Remedy	1. Replace with a new Maintenance Cartridge. 2. Close all Covers (warning cleared).
05: Replace Printhead			
05	01-0F *1	Title	Lifetime of Printhead has expired.
		Description	When Printer is initialized, printing is done, or cleaning is done , Printhead has reached its life.
		Remedy	1. Replace Printheads. 2. Restart Printer after replacing Printhead (warning cleared).
06: Purge Unit Replacement (*Remarks)			
06	01	Title	Lifetime of Purge Unit has expired.
		Description	The wipe count of Purge Unit has reached 5601 (end of service life).
		Remedy	1. Replace Purge Unit. 2. Restart Printer after replacing Purge Unit (warning cleared).
Remarks		"Purge Unit Replacement" is issued in advance, if "Purge Unit Replacement" is expected within 1 month when "Blade Cleaner Replacement" is issued.	
07: Blade Cleaner Replacement(*Remarks)			
07	01	Title	Lifetime of Blade Cleaner has expired.
		Description	The wipe count of Purge Unit has reached 5601 (end of service life).
		Remedy	1. Replace Blade Cleaner. 2. Restart Printer after replacing Blade Cleaner (warning cleared).
Remarks		"Blade Cleaner Replacement" is issued in advance, if "Blade Cleaner Replacement" is expected within 1 month when "Purge Unit Replacement" is issued.	

Code	Detail Code	Item	Description
09: Remaining Ink Detection Disabled			
09	01-0F *1	Title	Remaining ink detection function disabled.
		Description	When a remaining ink level detection error is cleared or Printer is initialized with Ink Tank Cover closed, remaining ink detection function has been deactivated.
		Remedy	1. Replace with a new Ink Tank. 2. Close all Covers (warning cleared).
0A: Inappropriate Current Printing Speed			
0A	01	Title	"Printer cool down" is performed in the Fixed Print Speed mode.
		Description	During printing in the Fixed Print Speed mode, “printer cool down” is performed.
		Remedy	1. Warning cleared automatically at job end. 2. Set print speed [Automatic Speed]. 3. Set print speed slower.
0A	02	Title	Printing data delay in fixed printing speed mode
		Description	During printing in the Fixed Print Speed mode, data delay is occurred.
		Remedy	1. Warning cleared automatically at job end. 2. Set print speed [Automatic Speed]. 3. Set print speed slower.
0C: Transport Unit Replacement			
0C	01	Title	Lifetime of Transport Unit has expired. (Printing can be continued)
		Description	During printing, the dot count has reached 95% of Transport Unit service life.
		Remedy	1. Replace Transport Unit. 2. Clear the counter. • Service Utility > Printer Information > Parts Counter > Transport unit
0D: RTC Battery Error			
0D	01	Title	RTC battery is run out.
		Description	The RTC drive voltage has been reduced to 1V or lower.
		Remedy	Replace Printer Controller PCB.

Code	Detail Code	Item	Description
14: Frequent Cleaning Warning 1			
14	01	Title	Frequent Printhead Cleaning (within 5 years after installation)
		Description	The number of ink level adjustment per day has exceeded the specified count.
		Remedy	1. Replace the Printhead. 2. Restart after Printhead replacement (clear the warning).
15: Frequent Cleaning Warning 2			
15	01	Title	Frequent Printhead Cleaning (more than 5 years after installation)
		Description	The number of ink level adjustment per day has exceeded the specified count.
		Remedy	1. Replace the Printhead. 2. Restart after Printhead replacement (clear the warning).

NOTE:

*1: The last digit indicates the color.

1: Bk, 2:C, 3:Bk/C, 4:M, 5:Bk/M, 6:C/M, 7:Bk/C/M, 8:Y, 9: Bk/Y, A:C/Y, B:Bk/C/Y, C:M/Y, D:Bk/ M/Y, E:C/M/Y, F:Bk/C/M/Y

Correspondence Table of Error Code

This is the correspondence table of the message on the status monitor of the printer driver and the error code of operator call error.

Message on Status Monitor	Error Code of Operator Call Error
Upper Unit open	0101
Ink Tank Door open	0201
Maintenance Cartridge Door open	0301
Paper Guide open	0501
Cutter Cover open	0701
Roll Cover open	0901
Paper empty 1	1001
Paper empty 2	1002
Paper length different 1	1102
Paper length different 2	1103
Paper length different 3	1104
Paper width different	1201
Paper jam 1	1301
Paper jam 2	1302
Paper jam 3	1304
Paper jam 4	1305
Paper jam 5	1306
Paper jam 6	1309
Paper jam 7	130B
Paper jam 8	130C
Paper jam 9	13E1
Paper jam 10	13E2
Gap/Mark length difference 1	1402
Gap/Mark length difference 2	1403
Paper load error 1	1901
Paper load error 2	1902
Paper load error 3	1903
Paper load error 4	1904
Paper load error 5	1905

Message on Status Monitor	Error Code of Operator Call Error
Paper jam 20	1D09
Paper jam 21	1D0B
Paper jam 22	1D11
Paper jam 23	1D12
Paper jam 25	1DE1
Paper jam 26	1DE2
Black ink empty	2001
Cyan ink empty	2002
Magenta ink empty	2004
Yellow ink empty	2008
Black ink tank setting error	2101
Cyan ink tank setting error	2102
Magenta ink tank setting error	2104
Yellow ink tank setting error	2108
Black ink tank abnormality 1	2201
Cyan ink tank abnormality 1	2202
Magenta ink tank abnormality 1	2204
Yellow ink tank abnormality 1	2208
Maintenance Cartridge full	2301
Maintenance Cartridge setting error	2401
Maintenance Cartridge abnormality 1	2501
Black ink tank abnormality 2	2601
Cyan ink tank abnormality 2	2602
Magenta ink tank abnormality 2	2604
Yellow ink tank abnormality 2	2608
Black ink tank abnormality 3	2701
Cyan ink tank abnormality 3	2702
Magenta ink tank abnormality 3	2704
Yellow ink tank abnormality 3	2708
Maintenance Cartridge full 2	2B01
Black ink tank abnormality 4	2D01
Cyan ink tank abnormality 4	2D02
Magenta ink tank abnormality 4	2D04

Message on Status Monitor	Error Code of Operator Call Error
Yellow ink tank abnormality 4	2D08
Black ink tank abnormality 5	2E01
Cyan ink tank abnormality 5	2E02
Magenta ink tank abnormality 5	2E04
Yellow ink tank abnormality 5	2E08
Maintenance Cartridge abnormality 3	2F01
Update error 1	3001
Update error 2	3002
Update error 3	3003
Update error 4	3004
Data mismatch 1	3101
Data mismatch 2	3102
Data mismatch 3	3103
Data mismatch 4	3104
Memory full	3201
Overlay data error	3401
Black ink level unknown	3701
Cyan ink level unknown	3702
Magenta ink level unknown	3704
Yellow ink level unknown	3708

Service Modes

Overview

Service Mode comes in 3 variations (which are not open to end users) as described below.

1. Download Mode

This mode cancels the initialization at power-on and allows only the firmware to be updated. To enter service mode, enter this mode first.
Operation errors may occur if Service Utility is used when the printer is running in download mode. Be sure to switch to Maintenance Mode or restart the printer in normal mode.

2. Maintenance Mode (Standalone Mode)

Press [PAUSE] Key once in Download Mode to enter Maintenance Mode.
Strong cleaning, ink initial loading, Shipping the printer, Printhead replacement and test printing (nozzle check pattern printing and settings printing), Printhead moving to print position from the operation panel are functional.
Service Utility can also be controlled from a PC.
Differences between startup in the normal mode and startup in the Maintenance Mode are as follows:
When service call error occurs because a Printhead failure occurs or the replacement timing of Purge Unit / Blade Cleaner is reached, Printer can be started in the Maintenance Mode so that these parts can be moved to the replacement positions using Service Utility.

3. Network Settings Initialization

This operation initializes Network Settings to factory setting values.

Differences of startup in Maintenance Mode from startup in normal mode

- Initial cleaning is not performed at power ON.
- When a Printhead Data error occurs, a Printhead ID error occurs, or Purge Unit / Blade Cleaner / Transport Unit (mist absorber) replacement timing is reached, the resulting service call error is masked.
- Masking the above error allows parts to be moved to the replacement position from Service Utility.

Download Mode

Start Printer in Download Mode to upgrade ROM.

How to Enter Download Mode

1. Press Power Key for 1 second or longer, and confirm buzzer beeps, then release Power Key to turn off the power.

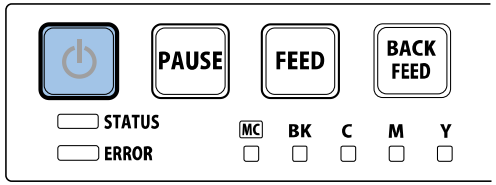

NOTE:
It takes approx. 30 sec. for the power off sequence to shutdown the printer.

2. Press power key while holding [PAUSE] and [FEED] Keys ON at a time. Release all keys when the second buzzer sounds.

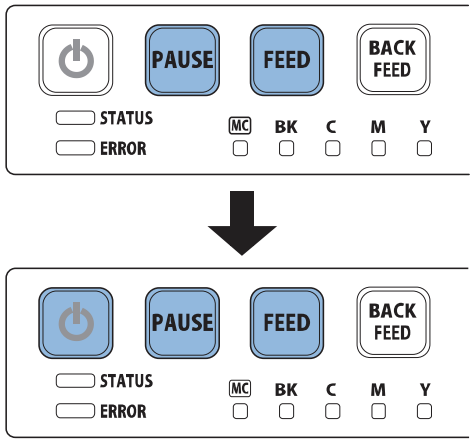

NOTE:
- Keep pressing 3 keys down until the second buzzer sounds.
  <Timing when the buzzer sounds>
  1st time: Immediately after pressing 3 Keys.
  2nd time : 7 seconds after the first
- When Printer enters Download Mode, Power Lamp is repeating 3-time flash.
  If Lamp is continuously lit (user mode), press and hold [Power] key for 1 second or longer and retry procedures from power off state.

Maintenance Mode

Start Printer in Maintenance Mode to execute specific functions without using PC.

How to Enter Maintenance Mode

1. Enter download mode. (see ch. " Download Mode".)
2. Press [PAUSE] Key once to enter Maintenance Mode.

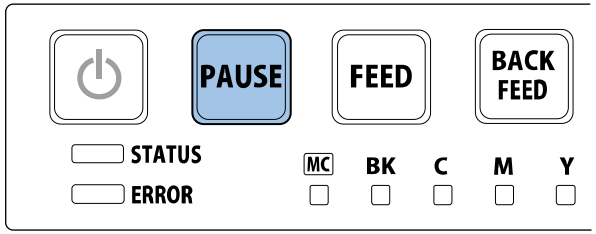

NOTE:
When the printer enters Maintenance Mode, power lamp is repeating 4-time flash. If power lamp is lit, hold power key for 1 second or longer to shutdown and try again.

Function of Maintenance Mode

Buzzer beeps 1 second interval when PAUSE Key is holding pressed at stand alone mode. Function to execute is related to the timing of release PAUSE Key. Refer to the table below. If taking mistake for selecting of function, try again to press and hold [PAUSE] Key to select the function.

NOTE:
- If executing "Shipping the printer","Printhead replacement" by mistake, ink drainage carries out. In that case, turn off the power, and then enter stand alone mode, and then load ink manually.

<Table 1>

PAUSE Key release timing	Lit pattern of Ink Warning amps				Function to execute
	Bk	C	M	Y	
Buzzer sounds once (1 second later)	-	-	-	On	Strong cleaning
Buzzer sounds twice (2 seconds later)	-	-	On	-	Initial ink loading
Buzzer sounds 3 times (3 seconds later)	-	-	On	On	Shipping the printer
Buzzer sounds 4 times (4 seconds later)	--	On	-	-	Printhead replacement
Buzzer sounds 5 times (5 seconds later)	-	On	-	On	Nozzle check pattern printing
Buzzer sounds 6 times (6 seconds later)	-	On	On	-	Setting value printing
Buzzer sounds 7 times (7 seconds later)	-	On	On	On	Printhead moving to print position
Buzzer sounds 8 times (8 seconds later)	-	-	-	-	Not to execute
9 seconds or more later	-	-	-	-	Not to execute (no buzzer)

Operation Procedure

Strong Cleaning

1. Press and hold [PAUSE] Key. Release [PAUSE] Key when the buzzer sounds once.

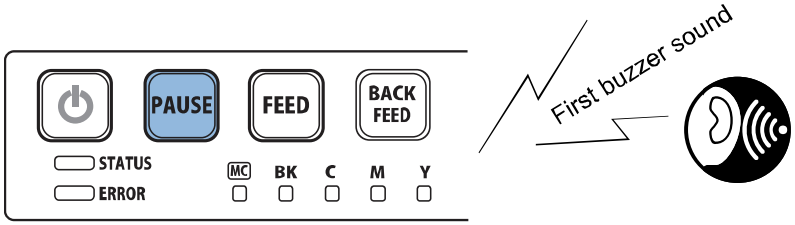

2. Confirm Ink Warning Lamp of yellow (Y) lit.
3. When [PAUSE] Key is pressed, cleaning is performed for the predetermined period of time. When it is completed, the buzzer sounds.

Initial Ink Loading

1. Press and hold [PAUSE] Key. Release [PAUSE] Key when the buzzer sounds twice.

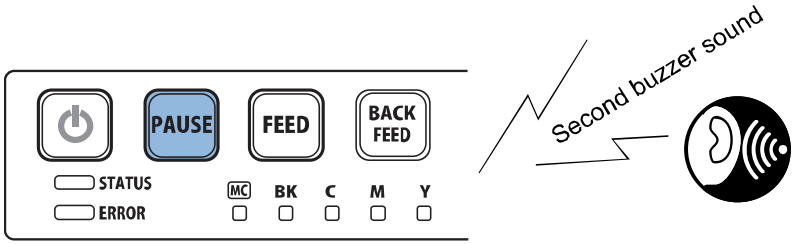

2. Confirm Ink Warning Lamp of magenta (M) lit.
3. When [PAUSE] Key is pressed, ink loading is performed for the predetermined period of time. When it is completed, the buzzer sounds.

Shipping the Printer

1. Press and hold [PAUSE] Key. Release [PAUSE] Key when the buzzer sounds three times.

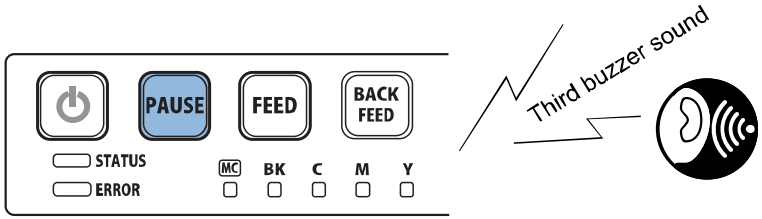

2. Confirm Ink Warning Lamps of magenta (M) and yellow (Y) lit.
3. When [PAUSE] Key is pressed, preparation for ink drainage is performed for the predetermined period of time. When it is completed, the buzzer sounds and [ERROR] lamp blinks continuously to prompt the user to proceed to the next step.

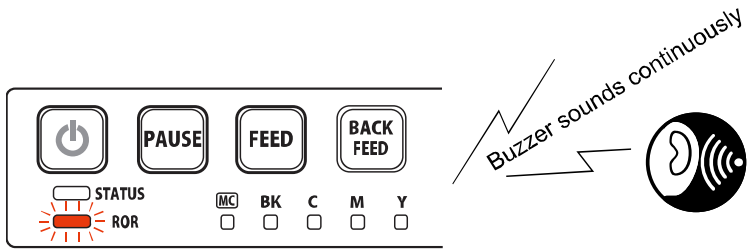

4. Remove Ink Tanks, and then close Ink Tank Door.

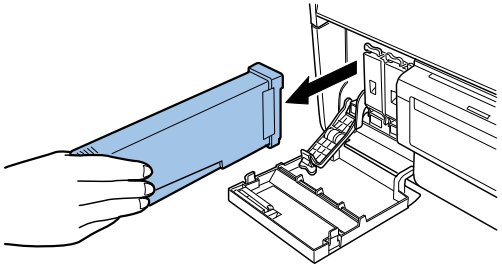

5. When Ink Tank Door is closed, ink is drained for the predetermined period of time, and Printer is turned off automatically.

CAUTION:
- Before transporting Printer, remove Ink Tanks.
- When transporting Printer, protect Transport section using the cushioning material removed when installing Printer.

Printheads Replacement

1. Press and hold [PAUSE] Key. Release [PAUSE] Key when the buzzer sounds three times..

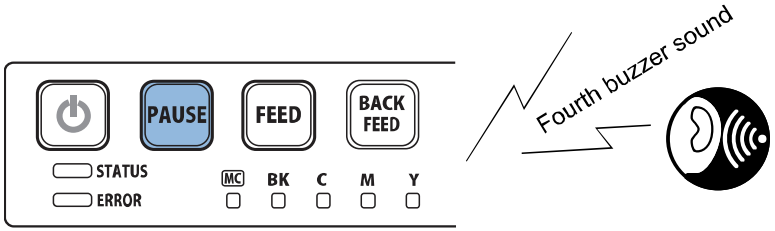

1. Press and hold [PAUSE] Key. Release [PAUSE] Key when the buzzer sounds four times.
2. Confirm Ink Warning Lamp of cyan (C) lit.
3. When [PAUSE] Key is pressed, preparation for ink drainage is performed for the predetermined period of time. When t is completed, the buzzer sounds and [ERROR] lamp blinks continuously to prompt the user to proceed to the next step.

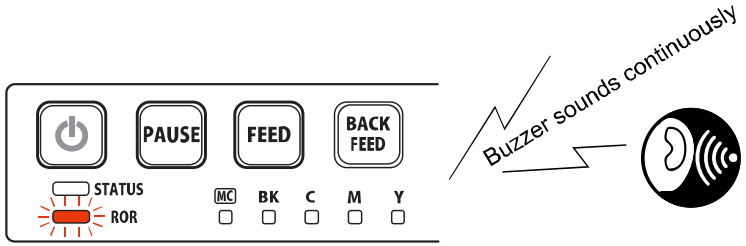

4. Remove Ink Tanks, and then close Ink Tank Door.

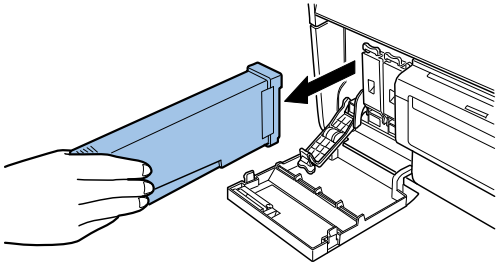

5. When Ink Tank Door is closed, ink is drained for the predetermined period of time. When ink drainage is completed, Printhead moves to the replacement position, Printer is turned off automatically, and preparation for Printhead eplacement is completed.

> NOTE:
> The procedure for replacing Printhead is briefly described below.
> 1. Replace Printhead by referring to "Replacing Printhead Unit".
> 2. Turn on Printer, and then load ink.
> 3. Adjust registration using Service Utility by referring to "Service Utility".

Nozzle check pattern printing

1. Press and hold [PAUSE] Key. Release [PAUSE] Key when the buzzer sounds three times.

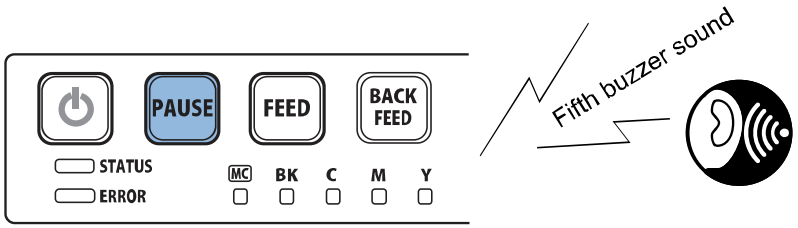

2. Confirm Ink Warning Lamps of cyan (C) and yellow (Y) lit.
3. When [PAUSE] Key is pressed, a nozzle check pattern is printed.

Setting value printing

1. Press and hold [PAUSE] Key. Release [PAUSE] Key when the buzzer sounds six times.

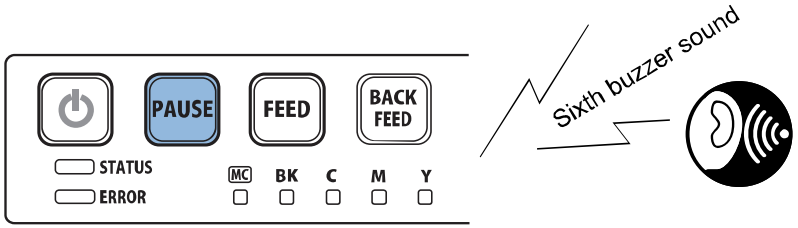

2. Confirm Ink Warning Lamps of cyan (C) and magenta (M) lit.
3. When [PAUSE] Key is pressed, Setting value is printed.

Printhead moving to print position

1. Press and hold [PAUSE] Key. Release [PAUSE] Key when the buzzer sounds seven times.

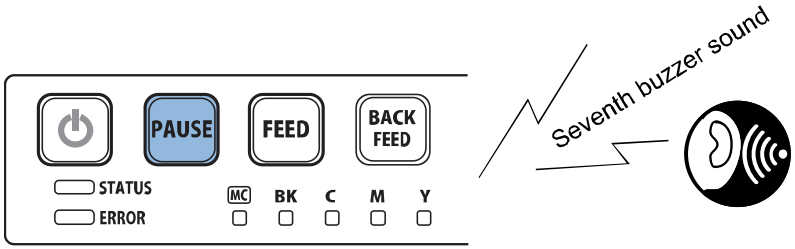

2. Confirm Ink Warning Lamps of cyan (C), magenta (M) and yellow (Y) lit.
3. When [PAUSE] Key is pressed, printhead is moved to the printing position (Printhead face cleaning position).

> NOTE:
> For how to clean Printhead face, refer to "Cleaning Procedure of Printhead Face".

Procedure of Network Settings Initialization

1. Press [Power] Key for 1 second or longer, and confirm buzzer beeps, then release [Power] Key to turn off the power.
2. Press [Power] Key while holding [PAUSE] Key for 10 seconds. Network Settings are initialized.

Service Tool

Overview of Service Utility

Service Utility is software used to service Printer using a PC. It can display various advanced functions and allows the service personnel to perform various advanced operations.

CAUTION:
Operation errors may occur if Service Utility is used when the printer is running in download mode. Be sure to switch to Maintenance Mode or restart the printer in normal mode. Service Utility can be executed in download mode only when downloading a firmware.

Menu Options

Function	Service Utility	Maintenance Mode (Reference)
Display of model name	Yes	-
Display/rewriting of Printer serial No.	Yes	-
Display of ROM Version	Yes	-
Display of cumulative total number of prints	Yes	-
Display of temperature and humidity inside Printer	Yes	-
Display/clearing of Consumables Counter Value (Blade Cleaner)	Yes	-
Display/clearing of Consumables Counter Value (Purge Unit)	Yes	-
Display/clearing of Consumables Counter Value (Transport Unit)	Yes	-
Display of Printheads serial No.	Yes	-
Display of life counters of Printheads	Yes	-
Display of details of Printheads	Yes	-
Display of print counts of Printheads	Yes	-
Display of date of Printheads installation	Yes	-
Display of Printheads temperature	Yes	-
Light cleaning	Yes	-
Medium cleaning	Yes	-
Strong cleaning	Yes	Yes
Shipping the printer	Yes	Yes
Shipping the defective printer	Yes	-
Moving the printer	Yes	-
Standard paper size setting	Yes	-
Paper size setting	Yes	-

Function	Service Utility	Maintenance Mode (Reference)
Setting of number of copies	Yes	-
Gap length/mark length setting	Yes	-
Margin setting	Yes	-
Gap setting	Yes	-
Transport speed setting	Yes	-
Type of form (TOF type) setting	Yes	-
Cutting interval setting	Yes	-
Auto cutter function ON/OFF setting	Yes	-
Nozzle check pattern printing	Yes	Yes
Setting value printing	Yes	Yes
No Print Pattern printing	Yes	-
Display of horizontal size of paper	Yes	-
Vertical Scale Adjustment	Yes	-
Printhead Slant Adjustment	Yes	-
Registration Adjustment	Yes	-
Registration Fine Adjustment	Yes	-
Reflection of registration adjustment value (L size) in M/S size	Yes	
Complement Non-Firing Nozzle	Yes	
TK GAP adjustment	Yes	-
Auto cutter stop/ cutting position adjustment	Yes	-
Firmware update	Yes	-
Send print data	Yes	-
Output setting value to file	Yes	-
Display of error log / Saving of error log file	Yes	-
Display of error status	Yes	-
User settings (Ink pre-fire On the Paper)	Yes	-
User settings (AIS Mode)	Yes	-
User settings (Fanfold Paper Mode)	Yes	-
User settings (Tear Off Mode)	Yes	-
User settings (Low Temperature Mode)	Yes	-
User settings (Prevent Unevenness)	Yes	-
Prevent paper rubbing mode (Printhead position and Paper Suction Fan adjustment)	Yes	-
Temporary Clearing of Maintenance Cartridge Full Error	Yes	-
Cutter JAM Reprint Mode	Yes	-
Prevent Back Feed Jam Mode	Yes	-
Replacement of consumables (Printhead)	Yes	Yes
Replacement of consumables (Purge Unit)	Yes	-
Replacement of consumables (Blade Cleaner)	Yes	-

Function	Service Utility	Maintenance Mode (Reference)
Replacement of Printer Controller PCB (Read/sending of saved data)	Yes	-
Replacement of Print Module (Read/sending of various adjustment values (Head Wipe Position, Head Cap Position, Head Print Position, Purge Unit Wipe Position, Head to Platen Distance))	Yes	-
Replacement of Power Supply Unit (Release the error) * If a power supply error (0211 to 0215) or Printer Controller PCB error (0105 to 0109) occurs	Yes	-
Acquisition of printer log (Output of saved data file)	Yes	-
Ink loading (Setup cleaning)	Yes	Yes
Movement of Printhead Cleaning Position	Yes	Yes
Movement of Printhead to reinsertion position	Yes	-
Movement of Purge Unit to reinsertion position	Yes	-
Display of printer status	Yes	-
Display of sensor status	Yes	-

Service Utility

Service Utility is software for servicing Printer through use of a PC. It provides Printer with functions performed in the service mode as well as functions for displaying and performing various additional features.

> NOTE:
> Service Utility may be updated to enhance and improve its functionality.

Operation

PC Operating Environment

This utility can be used on PC in the following operating environment:

- OS: Windows 7 (32bit/64bit), Windows 8.1 (32bit/64bit), Windows 10 (32bit/64bit)
- Interface: Hi-Speed USB, 1000BASE-T/100BASE-TX/10BASE-T

Setup Procedure

This utility does not require any particular installation work. Set up PC following the procedure described below.
1) Copy Service Utility to HD of PC to be used.

Start Procedure

> NOTE:
> 2 service utilities can not run at same time.

1) Connect PC and Printer using USB cable.
2) Turn on Printer.
3) After starting up PC, double-click Service Utility icon.
4) Select [Key Operator Mode/Administrator Mode] and click [OK].

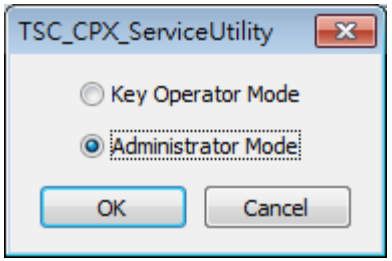

5) Enter the password and click [OK]. (For [Administrator Mode])

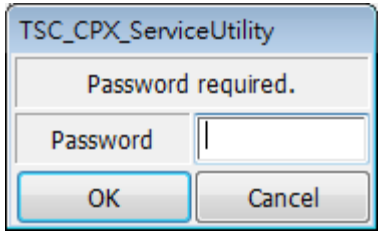

6) Select connecting port/unit and click [OK].

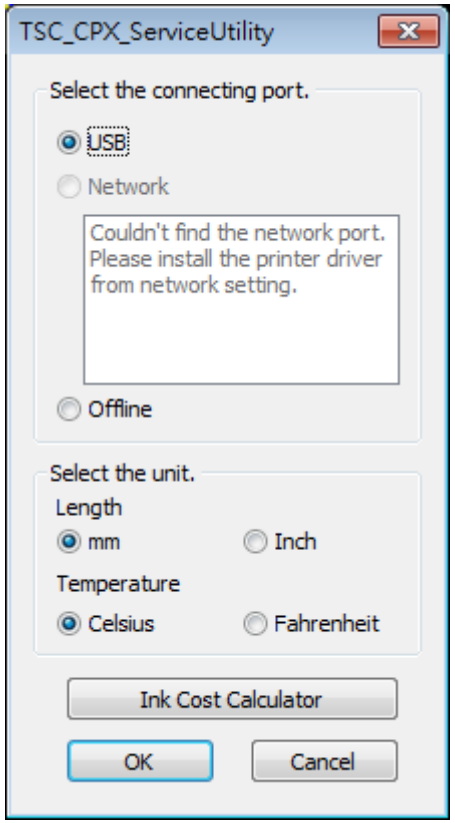

NOTE:
If you select "Offline" and then click "OK", the following dialog box appears, and you will be able to start Service Utility offline.

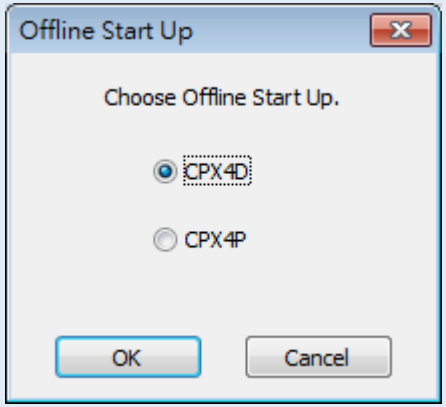

- **Printer Information**

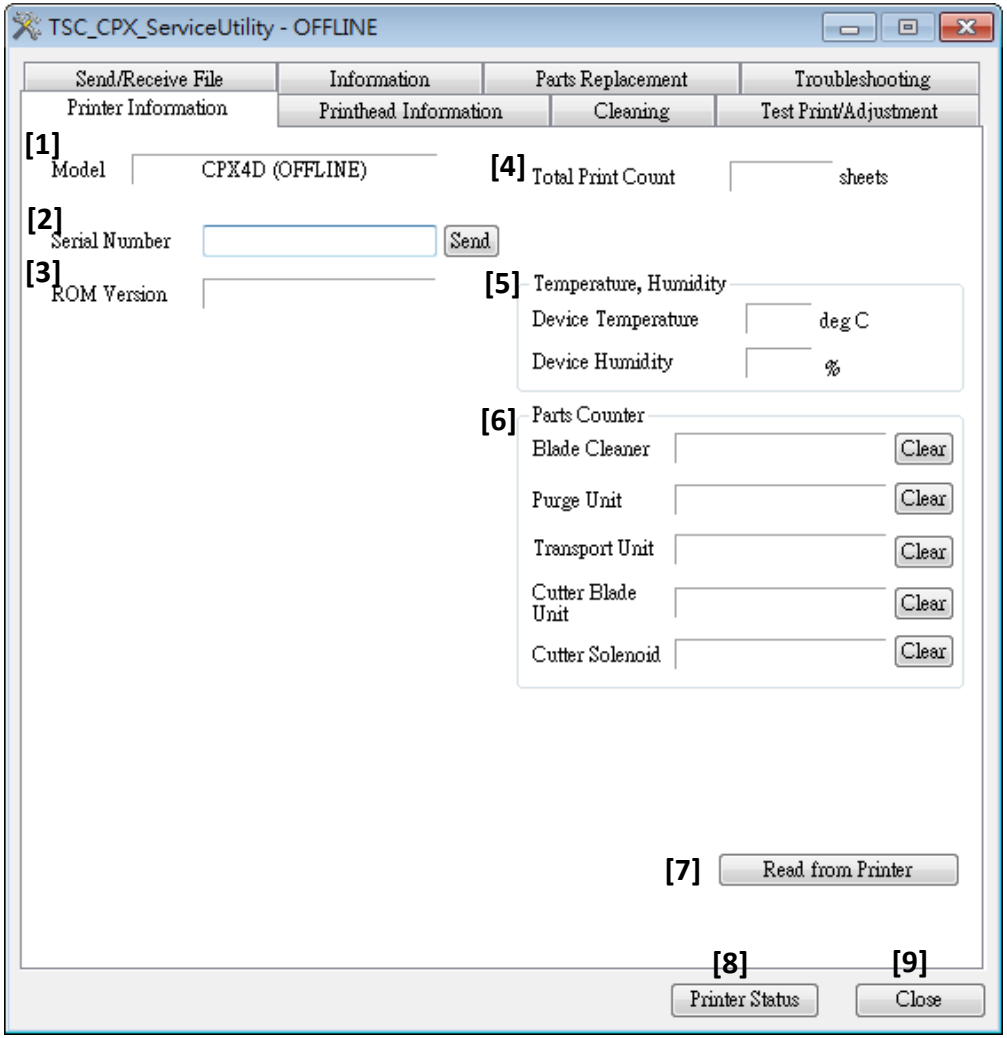

No.	Item		Description
[1]	Model		• The product name of connected Printer is displayed.
[2]	Serial Number		• The serial number assigned to Printer is displayed. • If the old data cannot be read/sent at the time of Printer Controller PCB replacement, set the serial number of Printer manually.
[3]	ROM Version		• The version of the firmware incorporated in Printer is displayed.
[4]	Total Print Count		• The number of print by Printer is displayed (3 inch feed = 1 print).
[5]	Temperature, Humidity	Device Temperature	• Temperature is read from Printer and displayed.
		Device Humidity	• Humidity is read from Printer and displayed.
[6]	Parts Counter	Blade Cleaner	• The extent of the parts deterioration is displayed. • When Blade Cleaner and/or Purge Unit are replaced using [Consumable Parts Replacement] menu on the [Parts Replacement] tab, parts counters are cleared automatically. • When Transport Unit is replaced, click [Clear] to clear the counter manually. • Transport Unit has [Print Count] and [Dot Count]. • Print Count shows the extent of transport parts deterioration. • Dot Count shows the extent of absorption of the absorber for ink mist collection. • Transport Unit has to be replaced when Print Count or Dot Count whichever reaches 100%. • When Print Count or Dot Count whichever reaches 100%, error message dis plays on [Status Monitor] of [Printer Driver].
		Purge Unit	
		Transport Unit	
[7]	Read from the Printer *Common to other sheets		• The information displayed are read from Printer.
[8]	Printer Status *Common to other sheets		• The status of Printer is displayed.
[9]	Sensor Status		• The status of Sensor is displayed.

- **Printer Information > Printer Status**

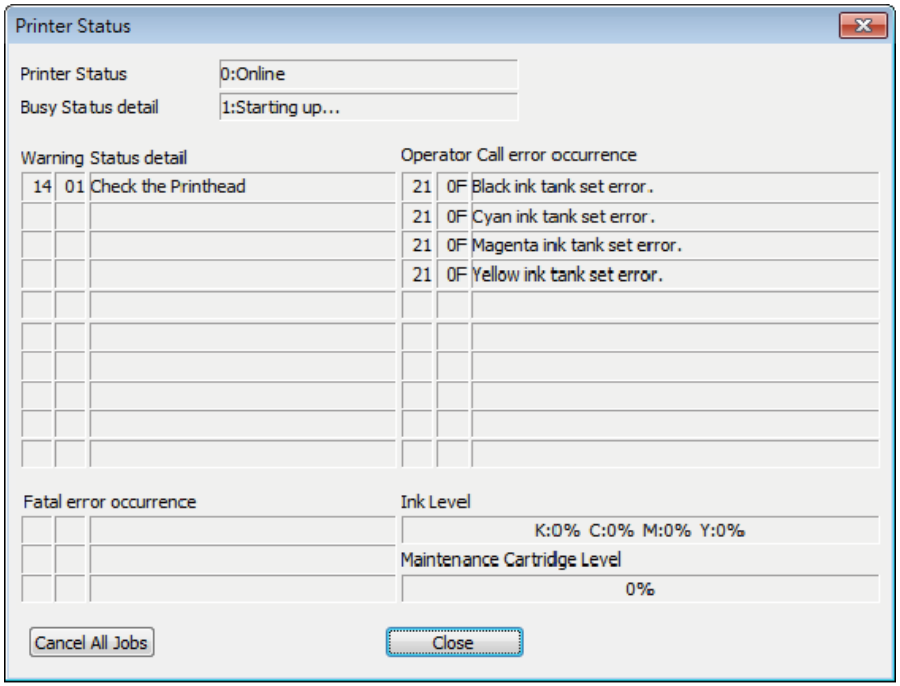

- **Printhead Information**

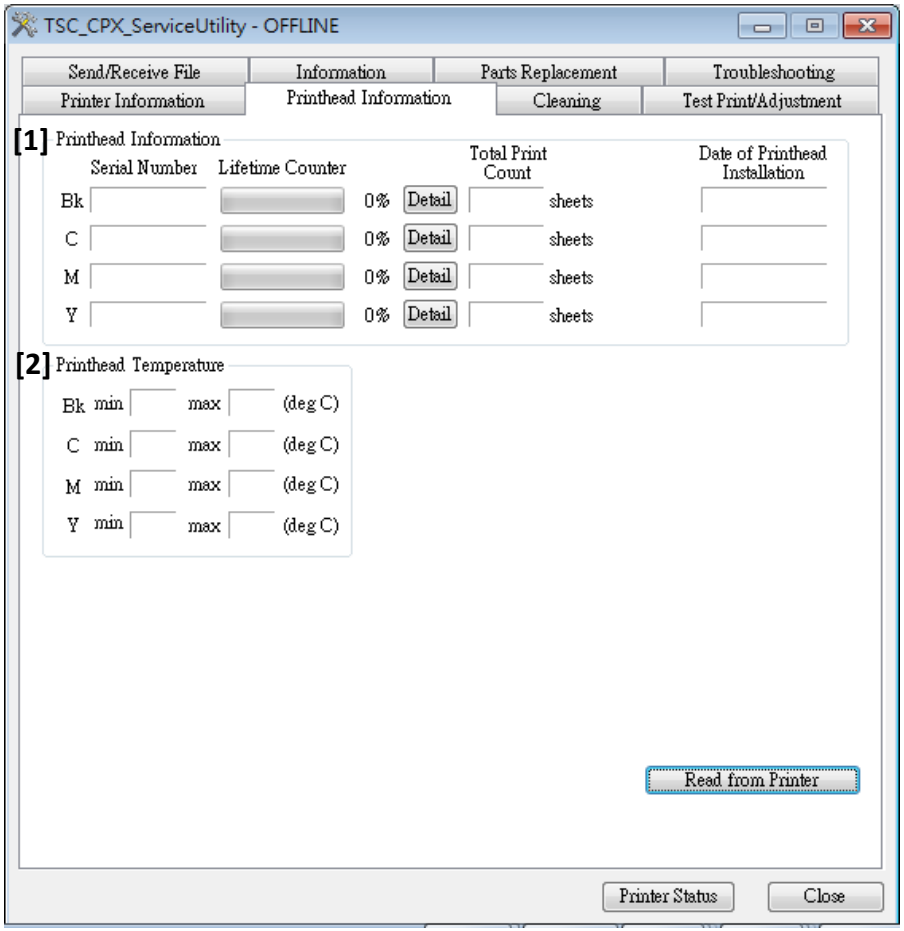

No.	Item		Description
[1]	Head Information	Serial Number	Serial number of each Printhead
		Lifetime Counter	The extent of the parts deterioration is displayed.
		Detail	Displays a graph showing the extent of Printhead deterioration in detail.
		Total Print Count	The total print count of each Printhead is displayed. (3inch conversion)
		Date of Printhead Installation	Date of installation of each Printhead.
[2]	Head Temperature		Temperature of each Printhead.

- **Cleaning**

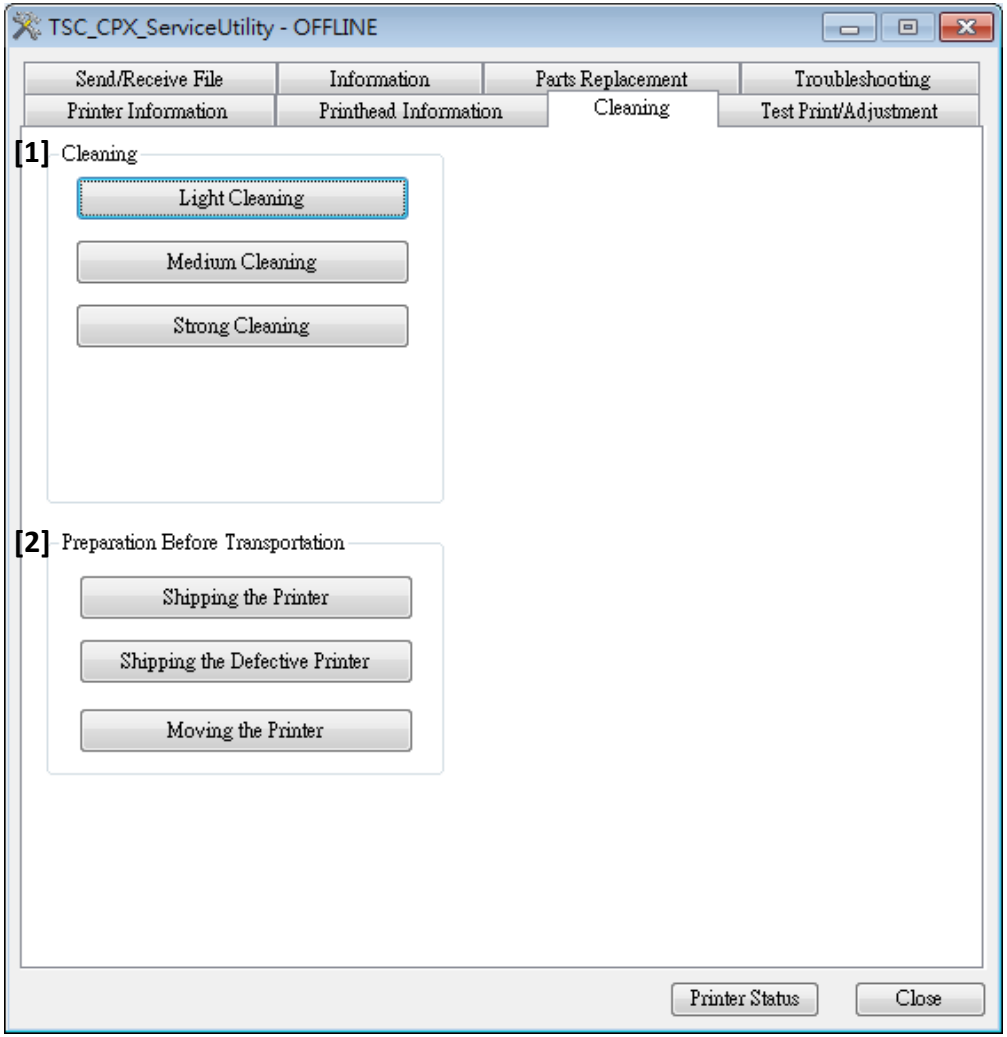

No.	Item		Description
[1]	Cleaning	Light Cleaning	• Carry out this cleaning first when non-discharge occurs.
		Medium Cleaning	• Carry out this cleaning when non-discharge still occurs after Light Cleaning. • This cleaning is slightly stronger than Light Cleaning.
		Strong Cleaning	• Carry out this cleaning when non-discharge still occurs after Medium Cleaning • This cleaning is slightly stronger than Medium Cleaning.
[2]	Preparation before transportation	Shipping the printer	• Before long-distance transportation, drain ink from Printer according to the instructions shown on the screen of Service Utility.
		Shipping the Defective printer	• This function is used when ink cannot be drained by executing [Shipping the Printer] of Service Utility. Even if a service call error has occurred, ink can be drained as much as possible. However, this function cannot be performed when Maintenance Cartridge is full or ink is leaking.
		Moving the printer	• Before moving Printer within the same floor or building, drain ink from Purge Unit according to the instructions shown on the screen of Service Utility.

- **Test Print / Adjustment**

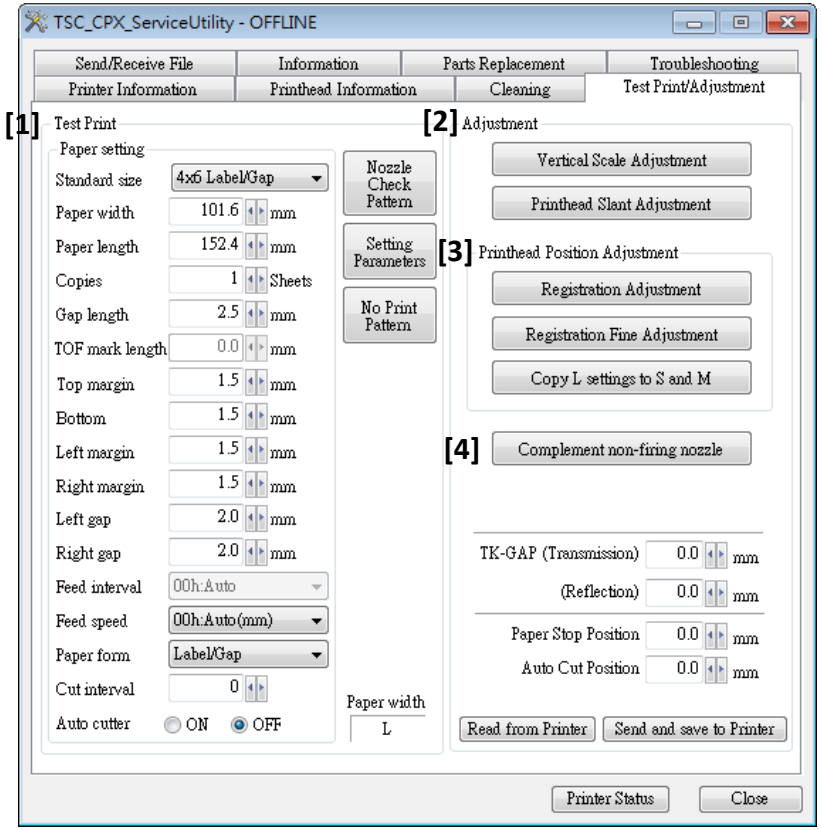

No.	Item		Description
[1]	Test Print	Standard size	• Set the standard size paper used for test printing.
		Paper width	• Set the horizontal size of paper used for test printing.
		Paper length	• Set the vertical size of paper used for test printing.
		Copies	• Set the number of copies to print for test printing.
		Gap length	• Set the gap length of paper used for test printing.
		TOF mark length	• Set the mark length of paper used for test printing.
		Top margin	• Set the top margin of test print image.
		Bottom margin	• Set the bottom margin of test print image.
		Left margin	• Set the left margin of test print image.
		Right margin	• Set the right margin of test print image.
		Left gap	• Set the left gap of test print image.
		Right gap	• Set the right gap of test print image.
		Feed speed	• Set the transport speed for test printing.

No.	Item		Description
[1]	Test Print	Paper form	• Set the type of paper used for test printing.
		Cut interval	• Set the cutting interval for test printing (when Auto Cutter is installed).
		Auto cutter	• Turn ON/OFF the optional cutter unit function.
		Nozzle Check Pattern	• Pattern for checking discharge state of nozzles.
		Setting parameters	• Pattern for checking the settings values such as registration adjustment value.
		No Print Pattern	• The printhead is moved to the print position and paper is fed to check the paper feed condition. Ink is not discharged.
		Paper width	• Horizontal sizes (widths) of paper is classified as follows and the currently set horizontal size of paper is displayed. • S-size: Paper width = 25.4 mm to 35.0 mm • M-size: Paper width = 35.1mm to 73.0mm • L-size: Paper width = 73.1mm to 120.0mm
[2]	Adjustment	Vertical Scale Adjustment	• Perform test printing and adjust vertical scale.
		Printhead Slant Adjustment	• Perform test printing and adjust printhead slant.
[3]	Head position adjustment	Registration Adjustment	• Perform test printing and adjust registration.
		Registration Fine Adjustment	• Perform test printing and adjust fine registration.
		Copy L setting to S and M	• Reflect the result of registration adjustment made using L-size (horizontal size) paper into S-size and M-size. *1. This operation is not required when registration adjustment is performed for S-size and M-size separately.
[4]	Other setting	Complement non-firing nozzle	• Perform test printing and complement non-firing nozzle.
		TK-GAP (Transparent)	• The TK-GAP is displayed. It can be set here.
		TK-GAP (Reflective)	• The TK-GAP is displayed. It can be set here.
		Auto cutter Cut position	• Cut position of Auto Cutter (Option) is displayed. It can be set here.
		Stop position	• Stop position of paper is displayed. It can be set here.

- **Test Print / Adjustment > Vertical Scale Adjustment**

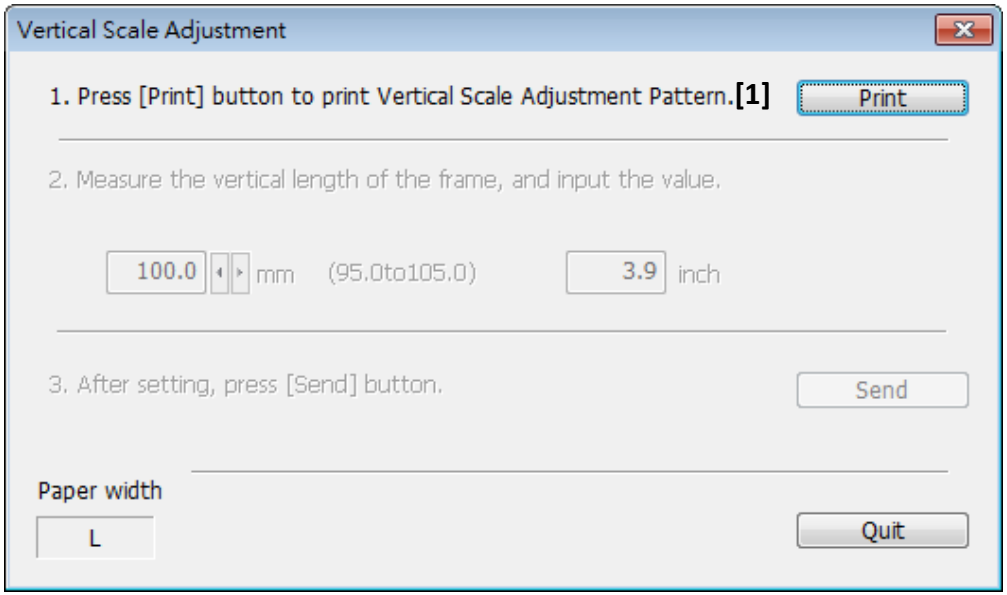

No.	Item	Description
[1]	Print	• Print a vertical scale adjustment pattern. Check the printout and carry out vertical scale adjustment. • For more details, refer to "Vertical Scale Adjustment".

- **Test Print/Adjustment > Printhead Slant Adjustment**

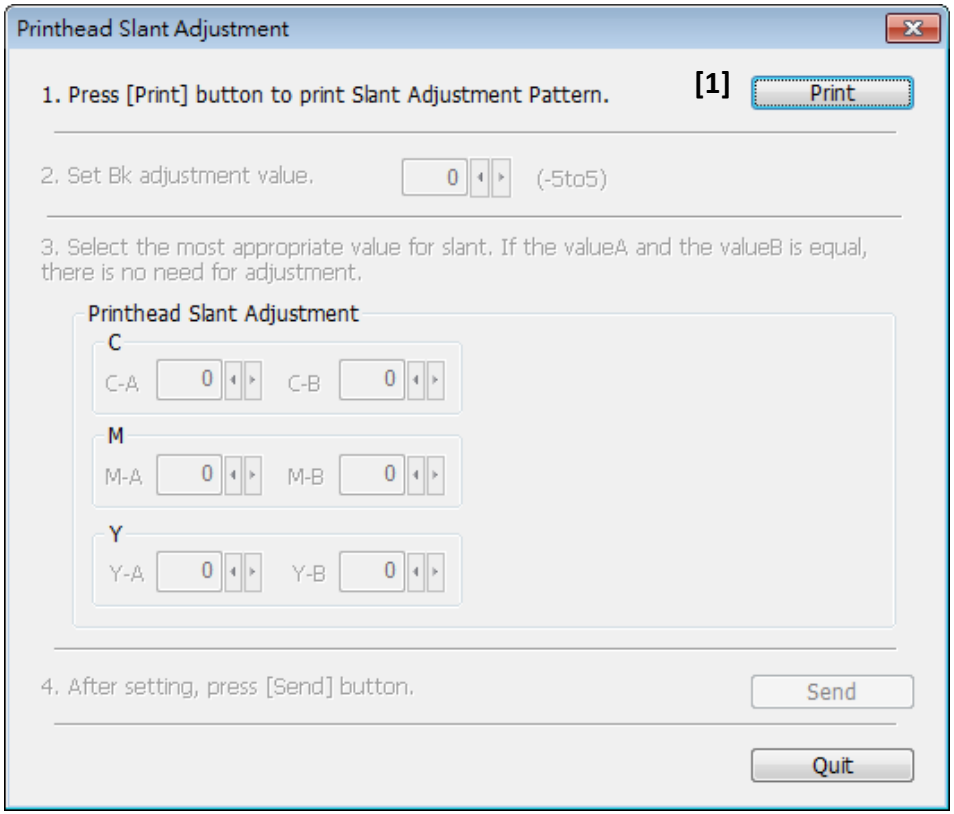

No.	Item	Description
[1]	Print	• Print a printhead slant adjustment pattern. Check the printout and carry out printhead slant adjustment. For more details, refer to "Printhead Slant Adjustment".

- **Test Print / Adjustment > Registration Adjustment**

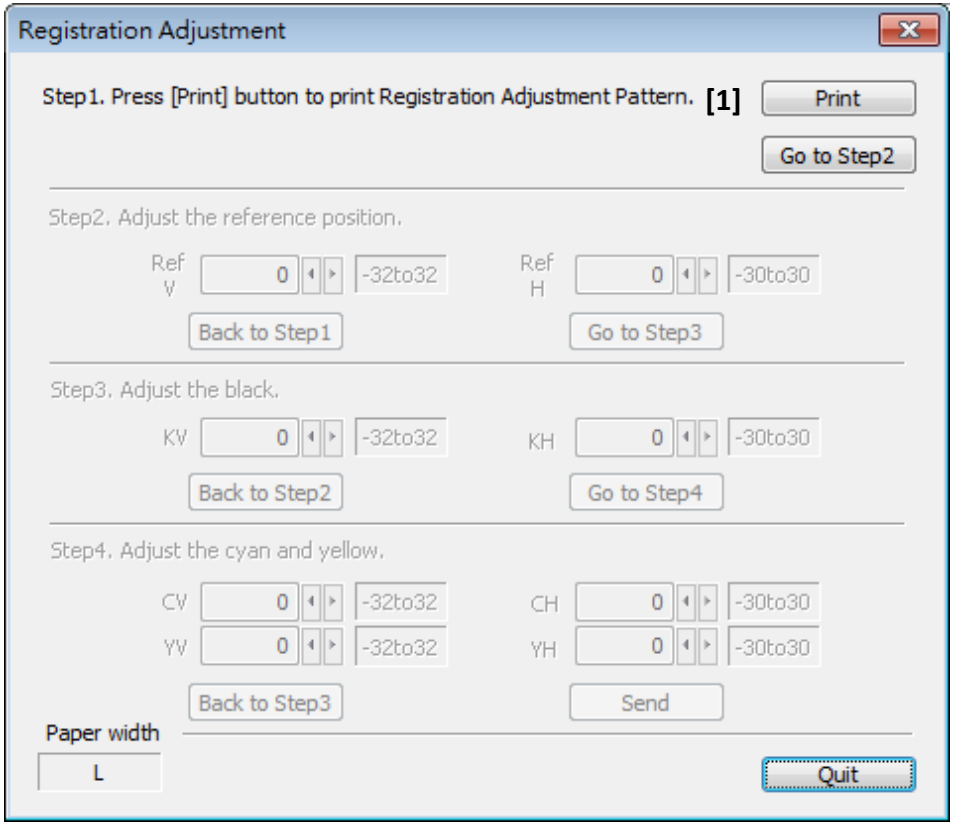

No.	Item	Description
[1]	Print	• Print a registration adjustment pattern. Check the printout and carry out registration adjustment. • For more details, refer to "Registration Adjustment".

- **Test Print/Adjustment > Registration Fine Adjustment**

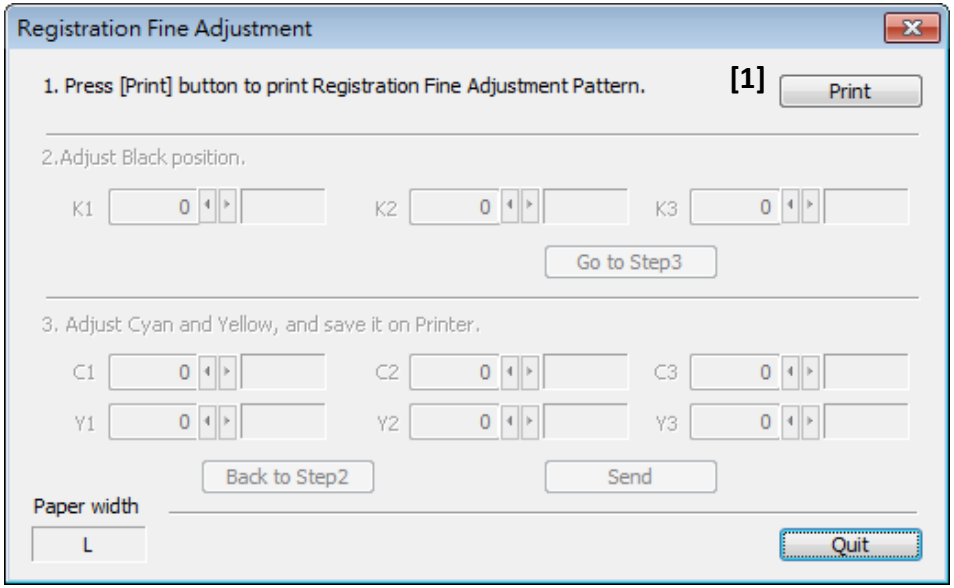

No.	Item	Description
[1]	Print	• Print a fine registration adjustment pattern. Check the printout and carry out registration fine adjustment. • For more details, refer to "Registration Fine Adjustment (Vertical Registration Adjustment (Detail))".

Test Print / Adjustment > Complement Non-Firing Nozzle

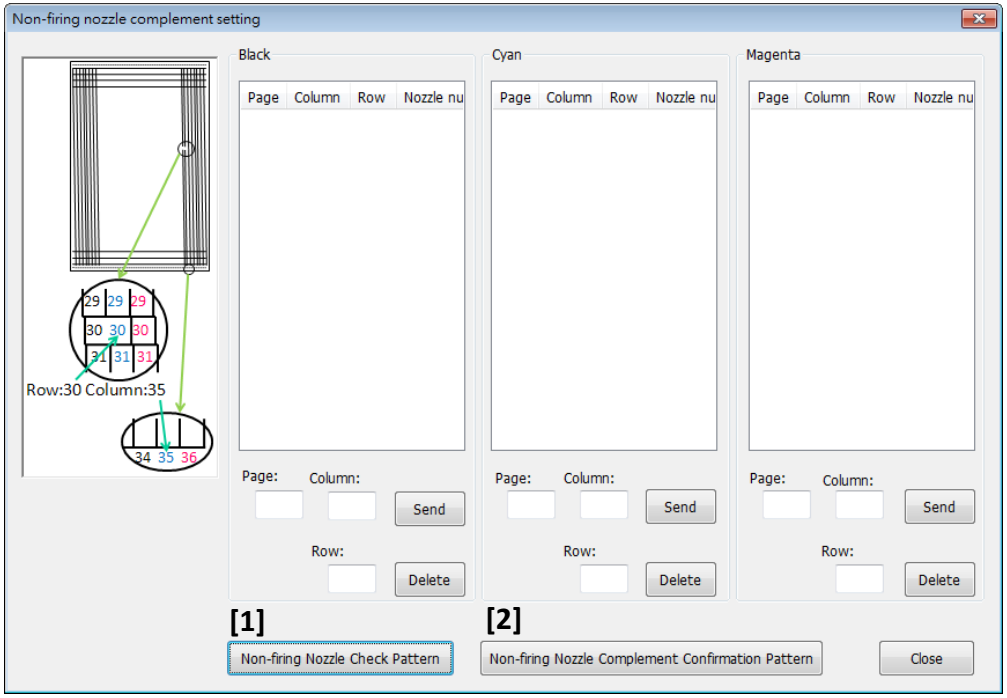

No.	Item	Description
[1]	Non-firing Nozzle Check Pattern	• Print a Non-firing Nozzle Check Pattern. Check the printout and carry out non-firing nozzle complement. • For more details, refer to "Adjustment > Complement Non- Firing Nozzle.
[2]	Non-firing Nozzle Complement Confirmation Pattern	• Print a Non-firing Nozzle Complement Confirmation Pattern. Confirm non-firing nozzle complement. • For more details, refer to "Adjustment > Complement Non-Firing Nozzle.

Send/ Received File

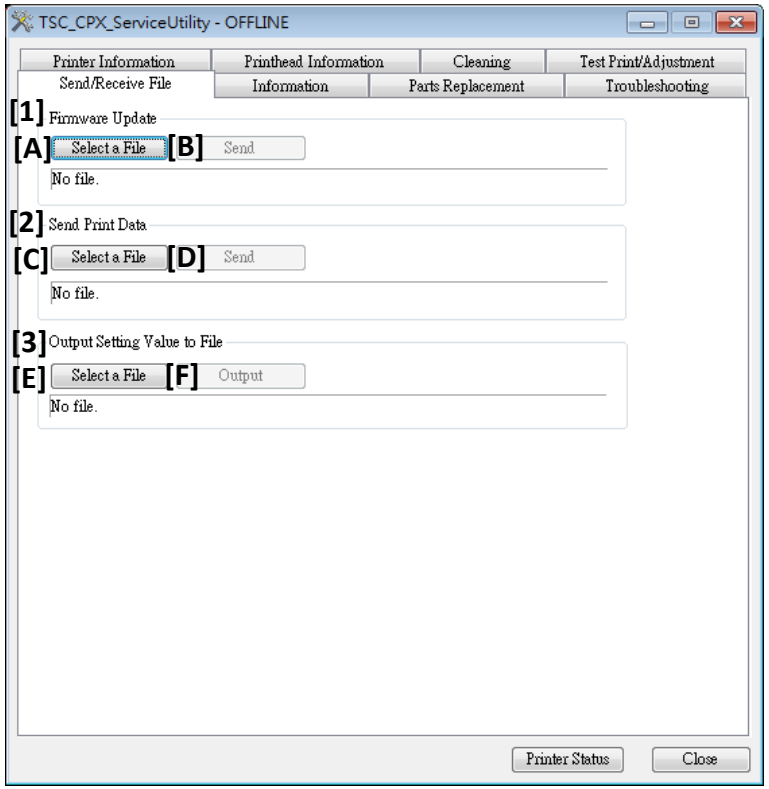

No.	Item	Description
[1]	Firmware Update	Update firmware. 1. Click "Select a File" [A]. 2. Double-click the firmware file (*.udf). Or, drag the print file in the window. 3. Click "Send" [B] to start updating the firmware.
[2]	Send Print Data	Print print data. 1. Click "Select a File" [C]. 2. Double-click the print file (*.prn). Or, drag the print file in the window. 3. Click "Send" [D] to start printing.
[3]	Output Setting Value to File	Output service specification setting values to a text file. 1. Click "Select a File" [E], and specify the file output destination. 2. Click "Output" [F] to save the setting file (*.txt) to the specified output destination.

- **Information**

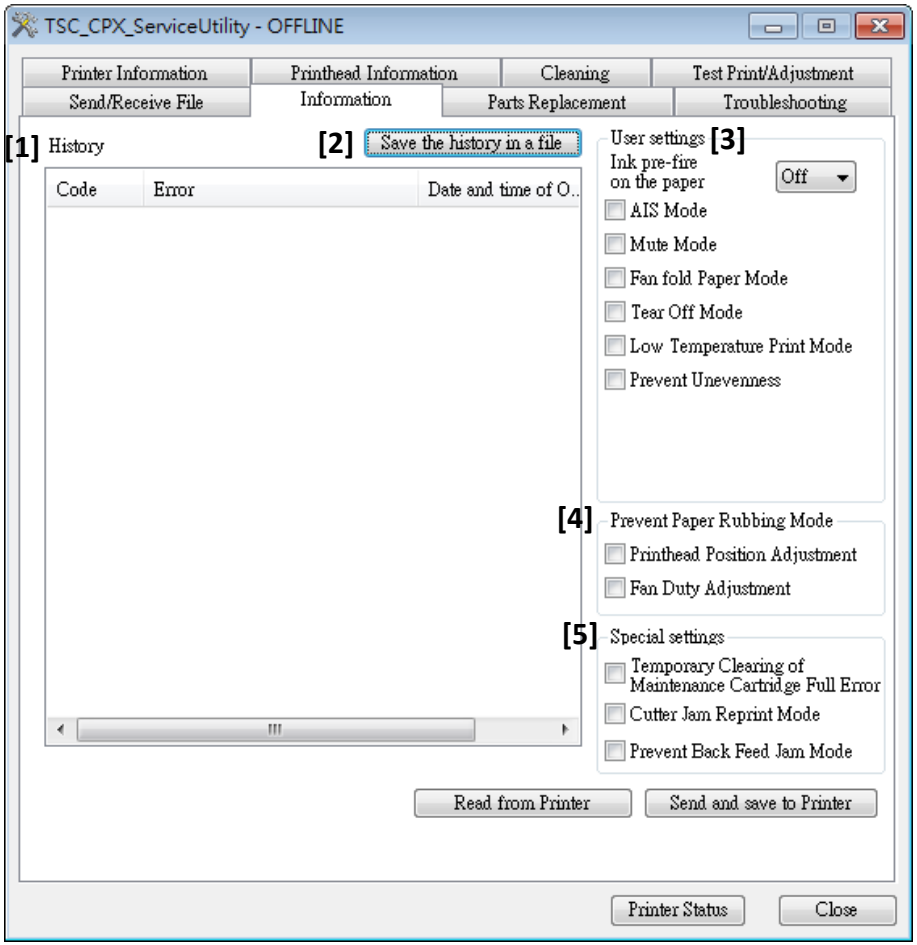

No.	Item		Description
[1]	History		Error codes and description of errors are displayed.
[2]	Save the history in a file		Save the error log recorded in Printer.
[3]	User setting		Set various user mode.
[4]	Prevent Paper Rubbing Mode	Printhead Position Adjustment	• Select Printhead adjustment. • Selecting this moves Printhead about 0.2 mm upward.
		Fan Duty Adjustment	• Select paper suction fan adjustment. • Selecting this increases paper suction force.

No.	Item		Description
[5]	Special settings	Temporary Clearing of Maintenance Cartridge Full Error	• Enable this setting to temporarily disable the detection of full Maintenance Cartridge based on the dot count. CAUTION: Using this function can cause ink to leak inside the printer. After taking the necessary measures, quickly replace with a new Maintenance Cartridge. Because ink may leak from the old Maintenance Cartridge, do not ask the customer to dispose of it. Take it back to the service center and dispose properly.
		Cutter JAM Reprint Mode	• When Auto-cutter is used and paper jam occurs just before the end of a print operation, its print job may be recognized as it has been completed without fault. If so, the print job is cleared and a recovery print cannot be reproduced any longer. By turning this mode ON, the last page is forcibly reprinted for recovery, if the above paper jam occurs. • When turning this mode ON, the extra print data of the last page is held in the printer and it will take more time to receive the next print job. This may cause that a throughput in the consecutive print job increases. • Explain the above disadvantage to the customer when activating this mode.
		Prevent Back Feed Jam Mode	• When a distance between two perforations is in the specific range and diameter of roll paper is relatively large, a perforation part of roll paper may be crushed and caught in the roll holder housing due to inertia of the roll paper. This may cause a paper jam in back-feeding at print start. • By turning this mode ON, paper is fed forward once to eliminate looseness then fed backward at print start reducing the back feed jam. • When turning this mode ON, forward and back feeding are always performed at every print start after cutting, resulting in increasing of throughput in the consecutive print job. • Explain the above disadvantage to the customer when activating this mode.

- **Parts Replacement**

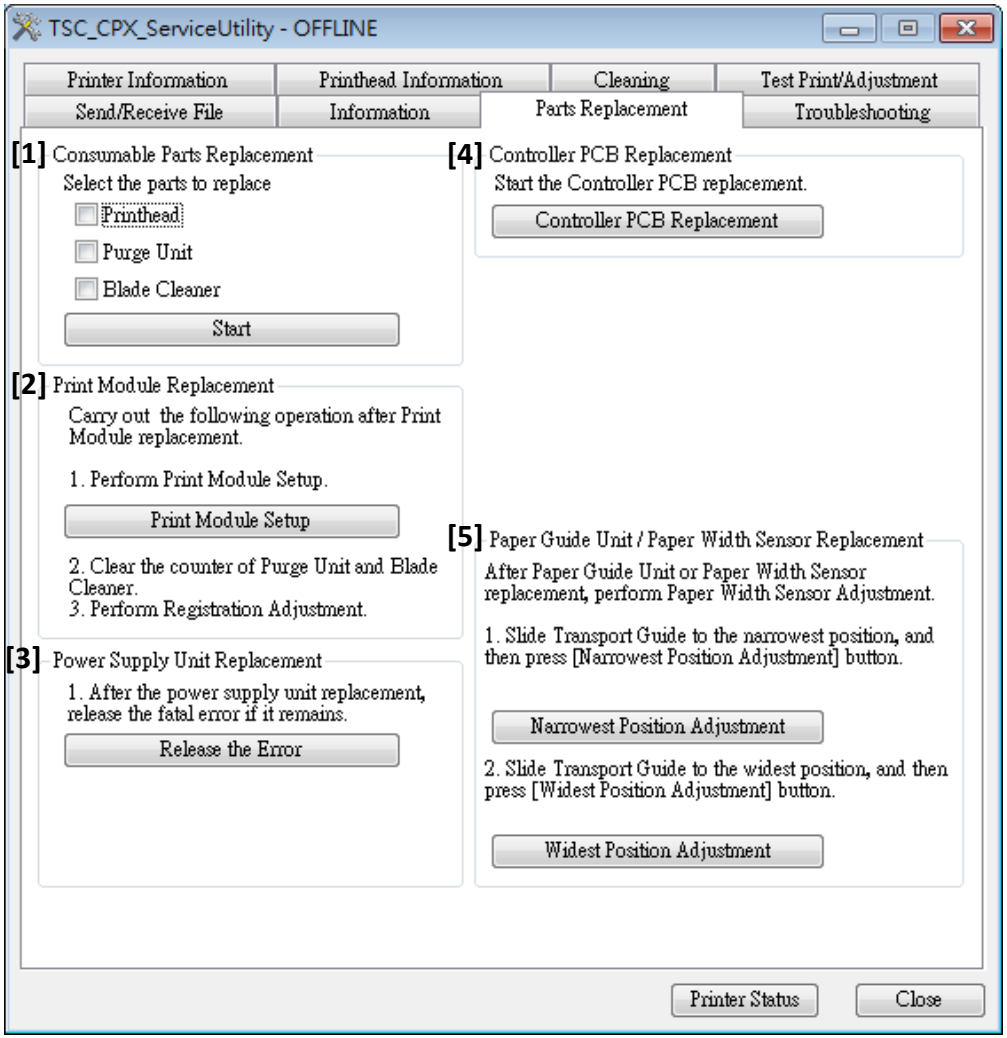

No.	Item		Description
[1]	Consumable Parts Replacement	Printhead	• Parts counter is reset. • Printhead moves to replace position. • Execute ink draining.
		Purge Unit	• Parts counter is reset. • Purge Unit moves to replace position.
		Blade Cleaner	• Parts counter is reset. • Blade Cleaner moves to replace position.
[2]	Print Module Replacement		• After replacement of Print Module, enter the values for adjusting Printhead control positions.
[3]	Power Supply Unit Replacement	Release the Error	• If a power supply error (0211 to 0215) occurs after Power Supply Unit replacement, clear the error.
[4]	Controller PCB Replacement		• Replace Printer Controller PCB.
[5]	Paper Guide Unit/ Paper Width Sensor Replacement	Narrowest Position Adjustment	• After Paper Guide Unit or Paper Width Sensor replacement, adjust paper width sensor at narrowest position.
		Widest Position Adjustment	• After Paper Guide Unit or Paper Width Sensor replacement, adjust paper width sensor at widest position.

- **Parts Replacement > Print Module Setup**

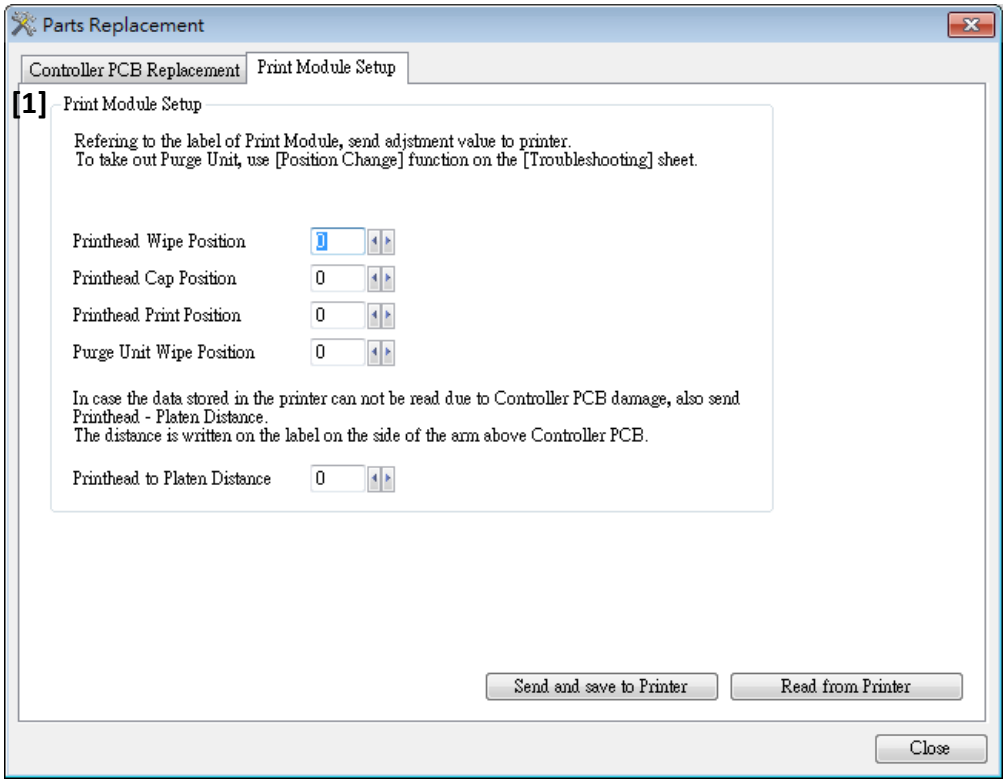

No.	Item		Description
[1]	Print Module Setup	Head Wipe Position	• Enter the value indicated on the adjustment value label provided at Printhead insertion slot of Print Module. • For more details, refer to "Adjustment > Print Module Setup".
		Head Cap Position	
		Head Print Position	
		Purge Unit Wipe Position	• Enter the value indicated on the adjustment value label provided on the side surface of Purge Unit. • For more details, refer to "Adjustment > Print Module Setup".
		Head to Platen Distance	• Enter the value indicated on the adjustment value label provided on the side of the arm above Printer Controller PCB. • For more details, refer to "Adjustment > Print Module Setup".

Parts Replacement > Controller PCB Replacement

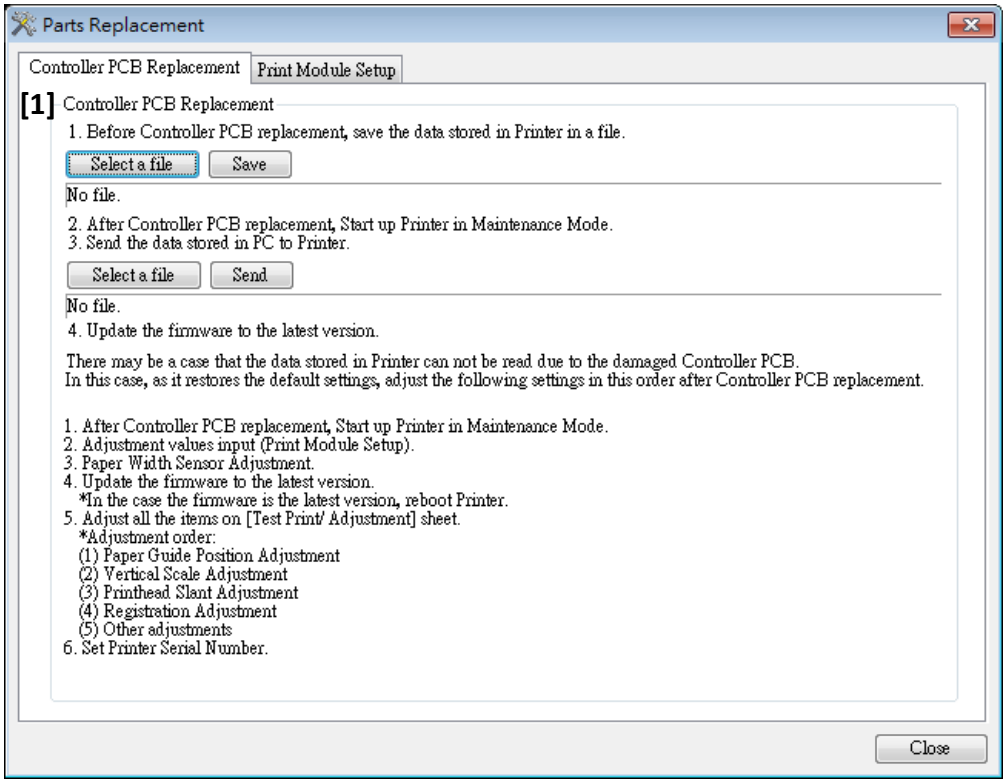

No.	Item		Description
[1]	Printer data saving	Create a File	• Before Controller PCB replacement. Specify the file to which the data stored in Printer is to be written.
		Save	• Write the data stored in Printer to the selected file.
	Saved Printer data sending	Select a File	• After Controller PCB replacement Specify the file to send to Printer.
		Send	• Send the selected file to Printer.
	If data cannot be loaded from the broken Controller PCB		• If data cannot be loaded from the broken Controller PCB, perform configuration and adjustment necessary for printer operation starting from step 1.

CAUTION:
The stored Printer Controller PCB data contains MAC address and other network information. When stored data is restored onto a new Printer Controller PCB, this information is also transferred along with the service settings, so note the following:

- When stored data is restored Because the same network information before the Printer Controller PCB is replaced is transferred, there is no need to change the printer driver settings. Because the Printer Controller PCB that the stored data is restored onto has the same MAC address as the original Printer Controller PCB, do not install it in a printer with a different serial number.
- If the stored data cannot be restored Because network information such as the MAC address and IP address is not transferred, the printer driver must be reinstalled, or the print port must be reconfigured.

NOTE:
After Controller PCB replacement, update to the latest firmware version.

- **Troubleshooting**

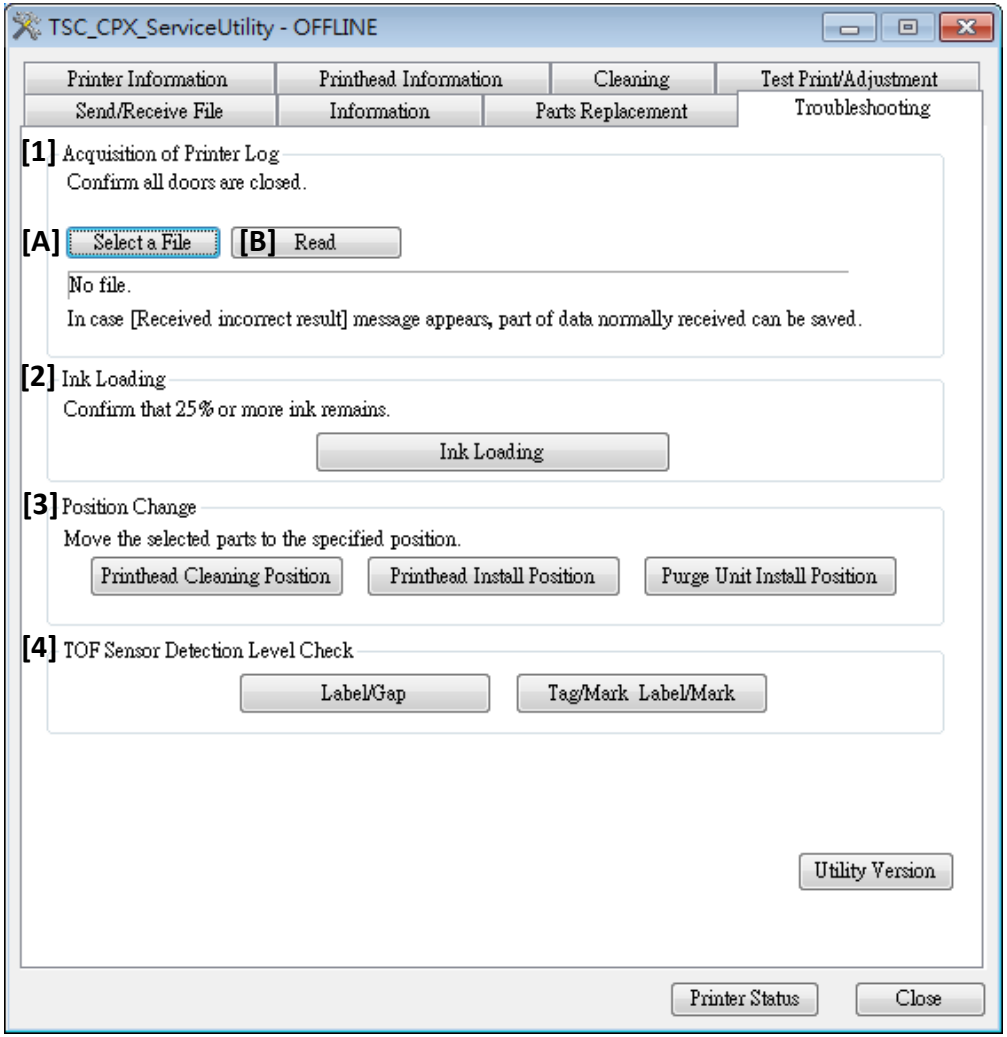

No.	Item		Description
[1]	Acquisition of Printer Log	Select a File	• Load the printer log file. <Procedure> 1. Click "Select a File", and specify where the log file is saved. 2. Click "Load". The printer log file is saved at the specified location. NOTE: Save /collect both text file and binary file.
[2]	Ink Loading		• When the ink flow passage is not filled with ink for some reason, carry out ink loading.
[3]	Position Change	Head Cleaning Position	• Move Printhead to Printhead cleaning position. After movement, wipe Printhead face with cleaning stick.
		Head Install Position	• Move the Printhead to the head install position when reconnecting the Printhead. * This function is used to check the electrical connection between the Printhead and Printhead Relay PCB by opening and closing the head release lever. CAUTION: Do not use this function to remove the Printhead. Because the Printhead is loaded with ink, the ink may leak inside the printer.
		Purge Unit Install Position	• Move Purge Unit in the case forgetting to read Purge Unit wipe position adjustment value at replacement of it.
[4]	TOF Sensor detection level check	Label/Gap	• Checking the detection level of TOF Sensor for paper • In the case the output level of the label against backing paper area is over 50%, the paper might influence transport function.
		Tag/Mark Label/Mark	• Checking the detection level of TOF Sensor for paper • In the case the detection level is over 80, the paper might influence transport function.

6. Installation

How to Utilize This Installation Procedure Symbols in the Illustration

The frequently-performed operations are described with symbols in this procedure.

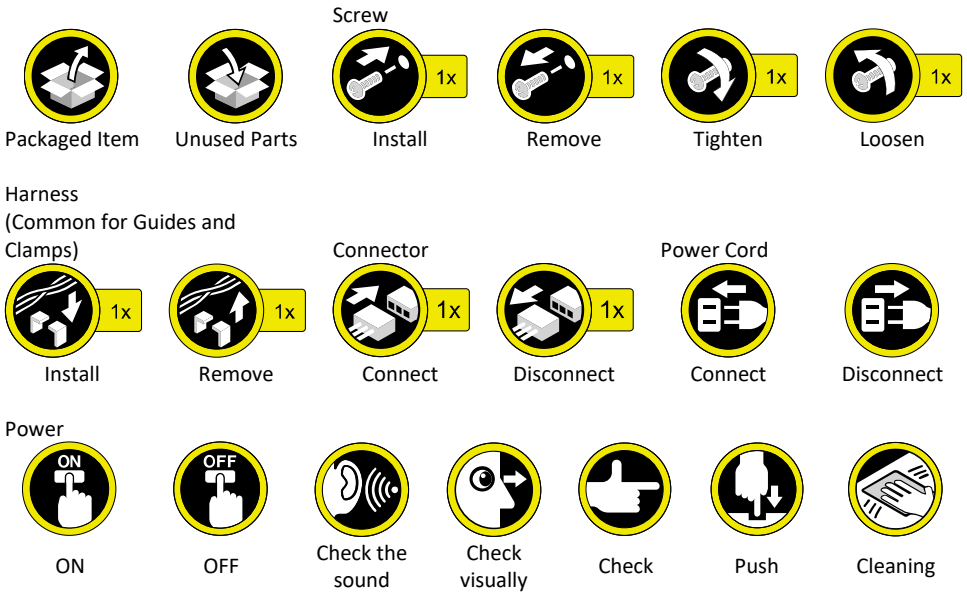

Checking Before Installation

Following shows requirements for the installation site. Therefore, it is desirable to see the installation site in advance before bringing in this Printer to the user's site.

Checking the Power Supply

1. Printer must be connectable to the outlet that can supply the rated voltage +10/-15% at the specified ampere or higher.
2. Install this Printer near the power outlet and leave sufficient space around the power plug so that it can be unplugged easily in an emergency.

Checking the Installation Environment

1. The installation environment must be as described below. Avoid installing Printer near the faucet, water heater, humidifier, or refrigerator.
   - Operating temperature range: 5 to 35 degrees Celsius
   - Operating humidity range: 10%RH to 90%RH
2. Avoid placing Printer in place exposed to high temperature and humidity, extremely low temperature, severe temperature changes, and direct sunlight. Especially, avoid placing Printer near fire, out of doors, in distribution warehouse, or in refrigerator.
3. Avoid installing Printer in an area subject to dust.
4. The room must be well-ventilated properly.
5. None of Printer feet should float. The machine must be held level constantly.
6. When placing Printer on desk, table or the like, it must be sturdy and stable enough to support weight of Printer.

Checking the Installation Space

1. The minimum space required for installation is shown below.

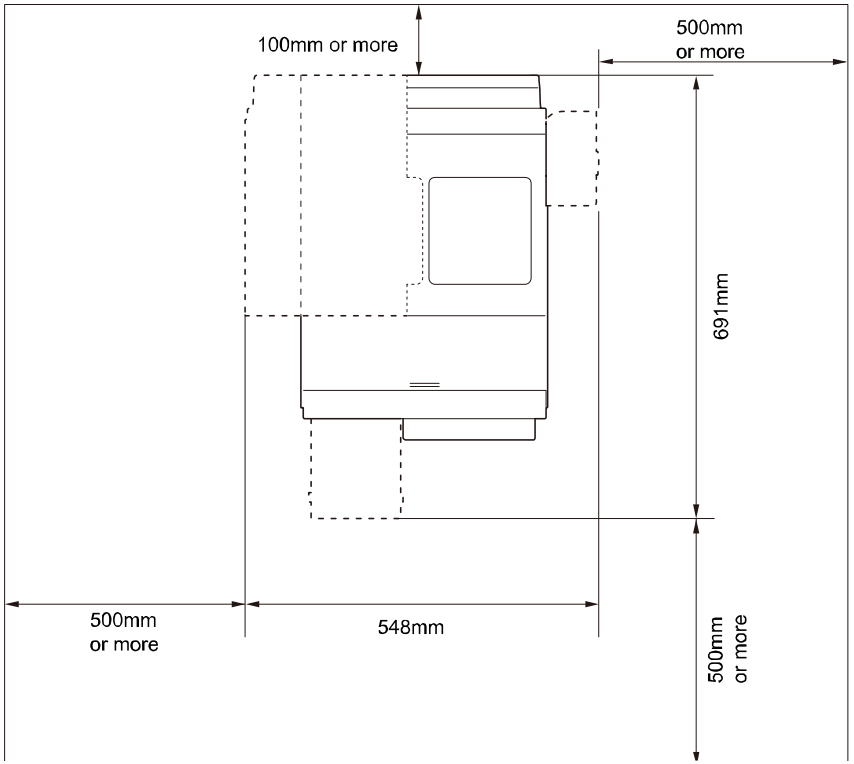

Installation Precautions

When installing Printer, observe the following precautions:

- Imaging faults can result due to dew condensation that occurs when the machine is moved from a cold place to a warm place. Leave the machine kept packed for at least 2 hours before installing it.
  (Dew condensation: When a metallic object is brought from a low-temperature place to a high-temperature place, water vapor around it is cooled abruptly and consequently water drops stick to the surface of the metallic object.)
- Printer weighs about 24kg. At least two persons are required to install it. In addition, be sure to keep the machine leveled when lifting it.

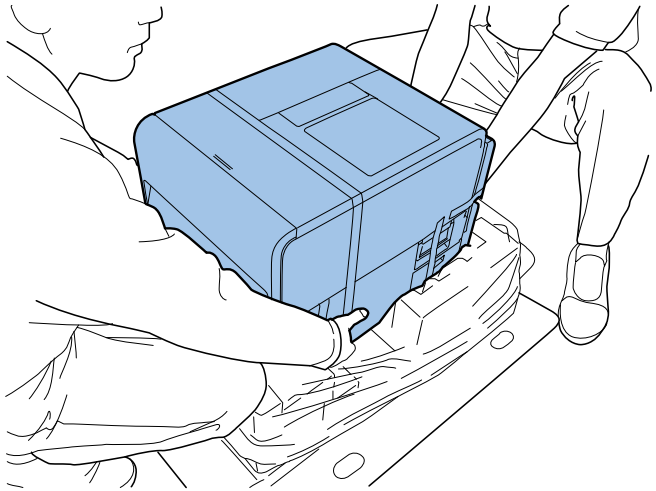

- Be sure to wear a grounding wrist strap prior to the service work to prevent electrostatic destruction of the printheads, PCB's, etc.

Checking the Contents

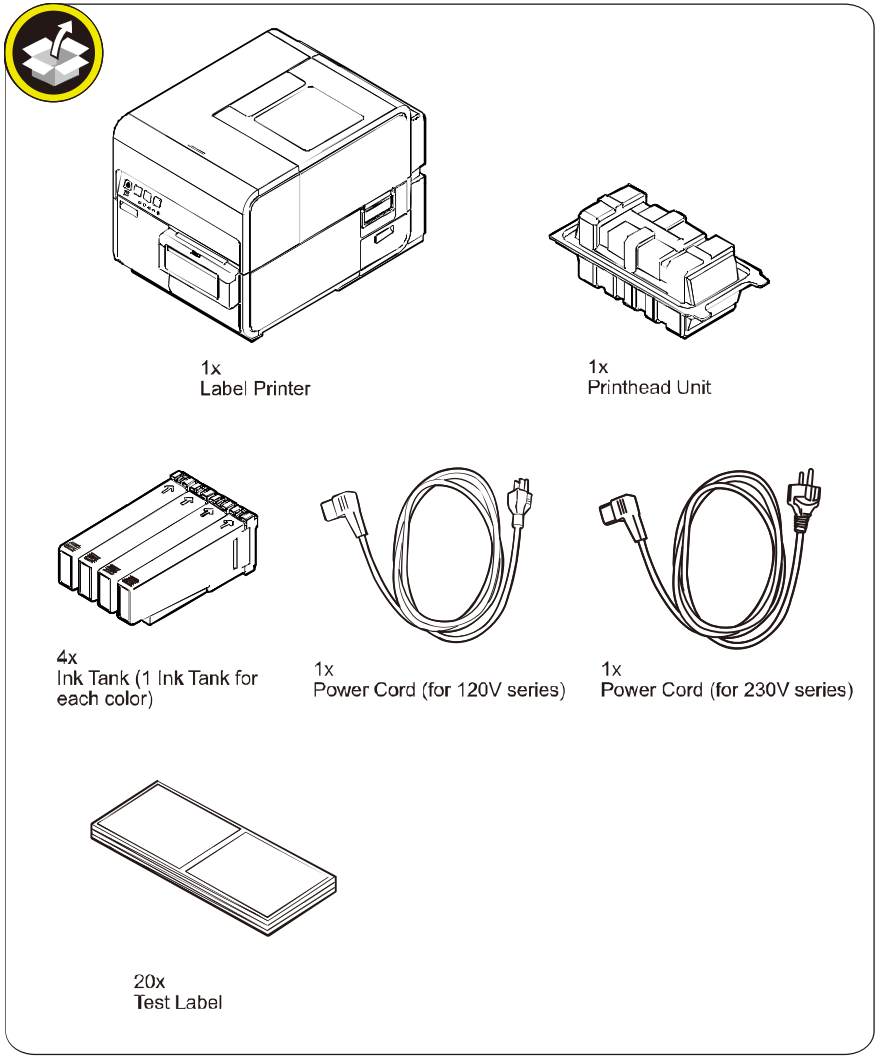

<Others>
- Including guides
- Printer Software CD-ROM

CAUTION:
Several types of Power Cords come with Printer. Use appropriate Power Cord for the power supply used at the installation site.

NOTE:
Included Spare Paper can be used for a print image checking.

Unpacking Procedure

NOTE:
Printer is secured using shipping tapes and cushioning materials to protect it against the vibrations and shocks applied during transportation. By following the procedure described below, remove all pieces of shipping tapes and cushioning materials before installing Printer. Keep the removed cushioning materials for future transportation for relocation or repair of Printer.

1) Remove 4 grips from the packing carton, and then remove the outer casing.

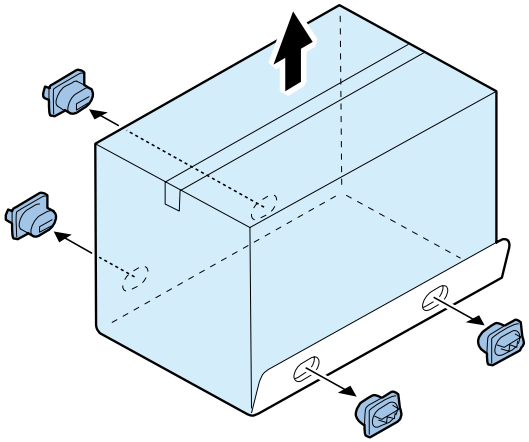

2) Remove Accessory Box, and then remove Upper Pads.

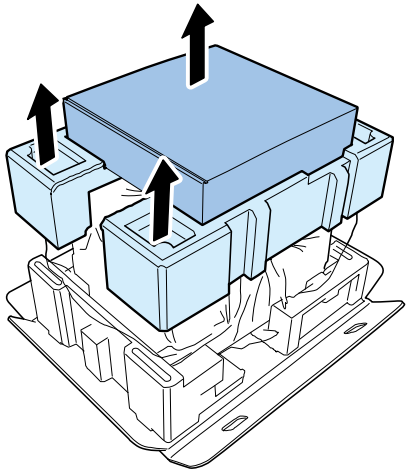

3) Strip the plastic bag from top to bottom.

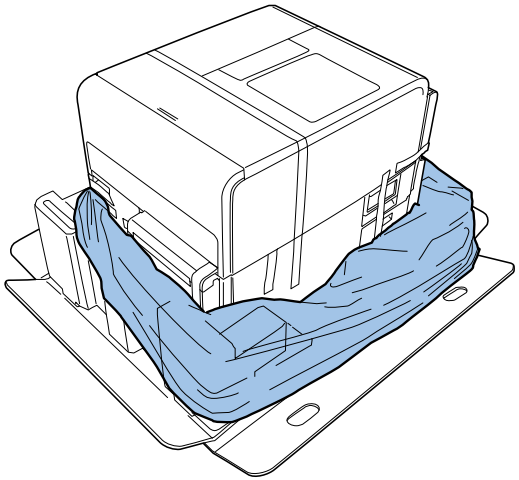

4) Holding the handles at the bottom of Printer, lift Printer to take it out from the package base.

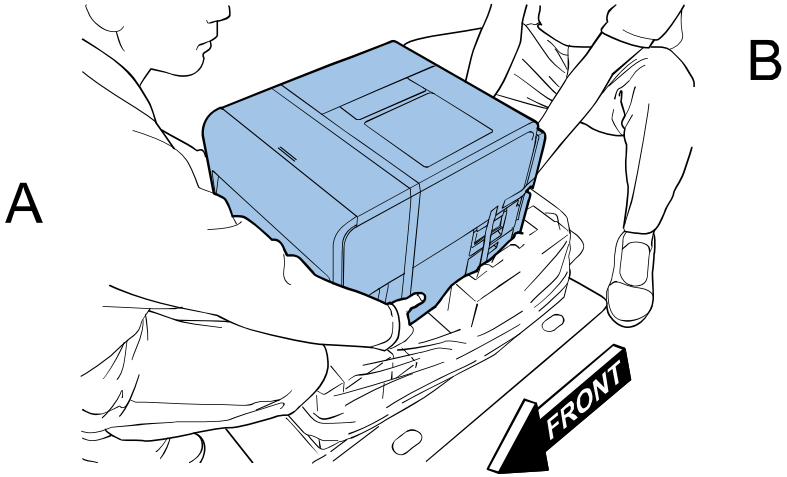

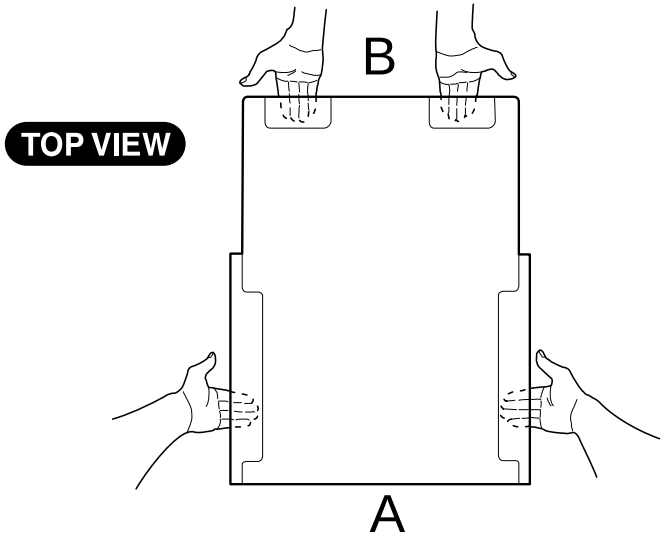

⚠ CAUTION:
- Printer weighs about 24 kg. At least two persons are required to lift it up.
- Do not hold the front side of Printer.

5) Place Printer on a horizontal table, and then remove all pieces of shipping tape and cushioning materials visible on the exterior of Printer.

6) Open Roll Cover.

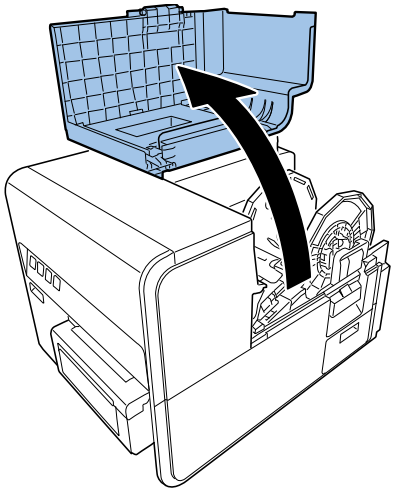

7) Remove all pieces of the tape securing Roll Holder.

8) Push down Upper Unit Open Lever, and then open Upper Unit.

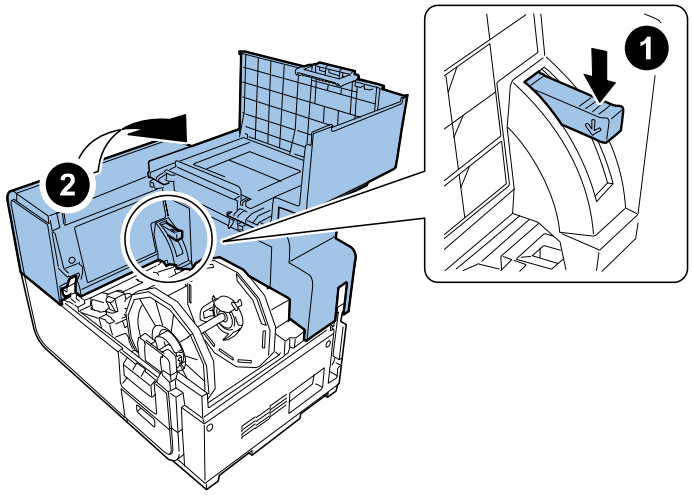

9) Remove shipping tapes and cushioning materials from inside of Printer.

NOTE:
Save and store the removed cushioning materials for future transportation in relocation, repairing of Printer, etc.

10) Turn Pinch Roller Release Lever, and then remove the protection sheet.

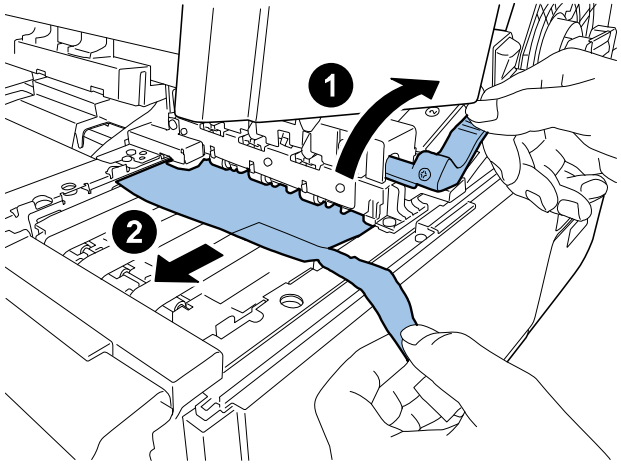

Installation Procedure

Mounting Printhead Unit

> ⚠ CAUTION:
> Semiconductive components are used in the printhead.
> As careless handling of the printhead under low humidity may cause electrostatic destruction in it, be sure to wear a grounding wrist strap prior to the handling.

1) Remove 2 screws to remove Maintenance Cover from Upper Unit.

- 2 screws

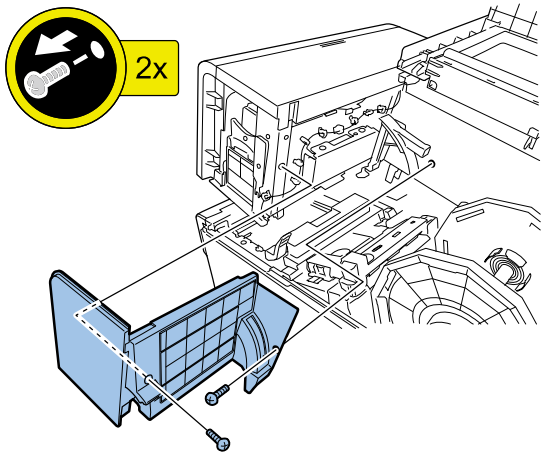

2) Close Upper Unit.

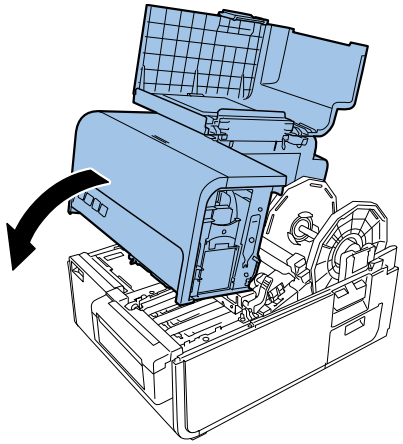

3) Remove the shipping tape, remove Print Module Cover, and then open Lower Printhead Release Lever.

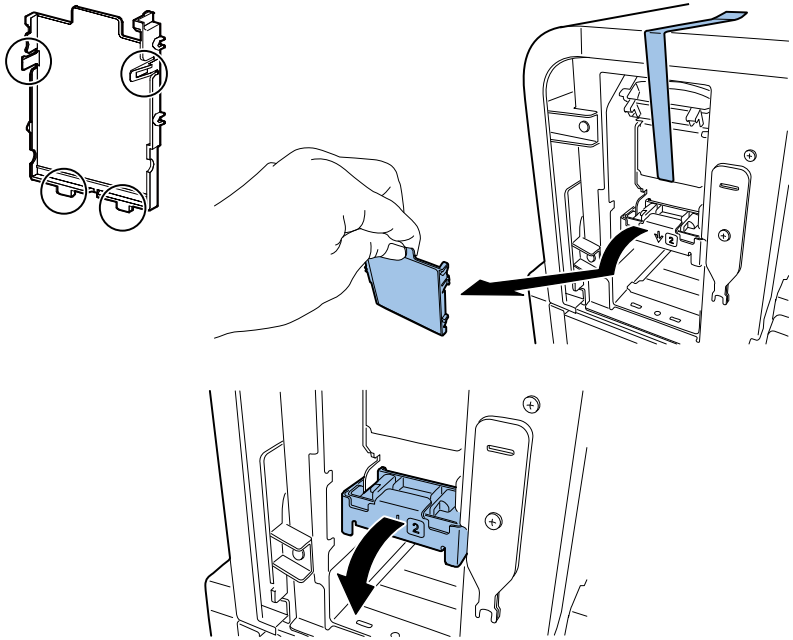

4) Remove Blade Cleaner.

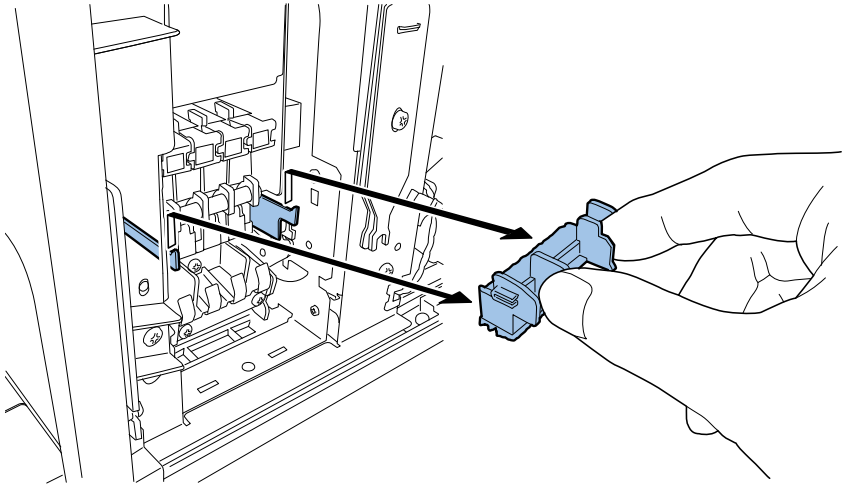

5) Take out included Printhead from the package.

> ⚠ CAUTION:
> Semiconductive components are used in the printhead.
> As careless handling of the printhead under low humidity may cause electrostatic destruction in it, be sure to wear a grounding wrist strap prior to the handling.

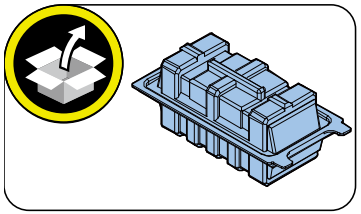

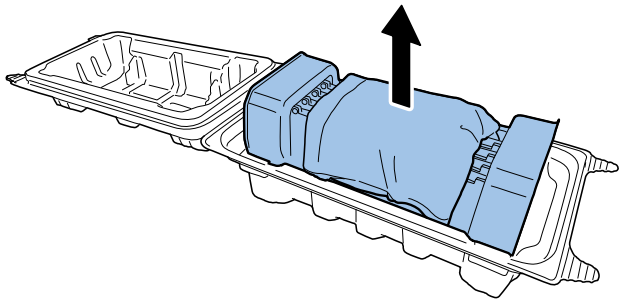

6) Remove the cover and cushioning materials.

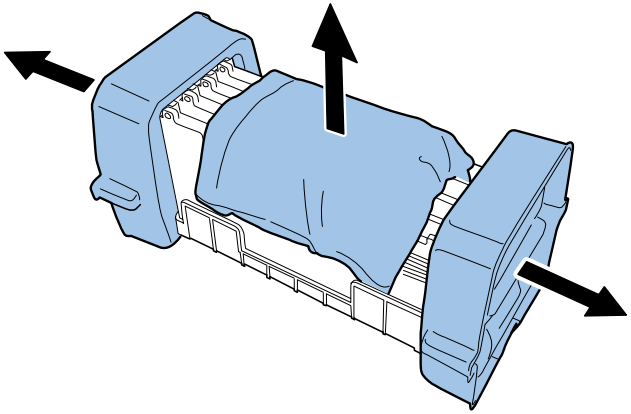

7) Remove the protection.

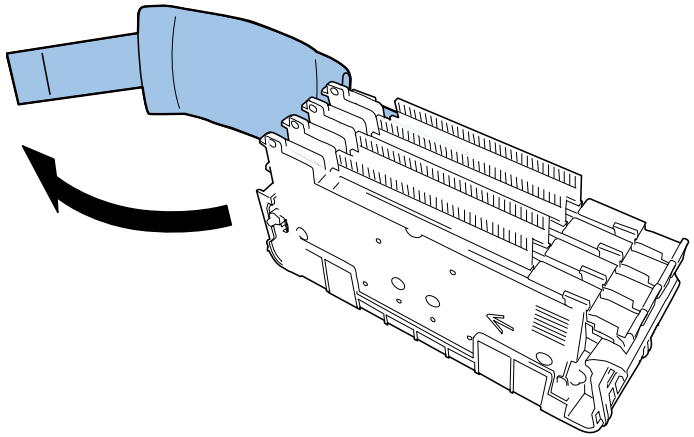

8) Take Printhead Unit out of the case.

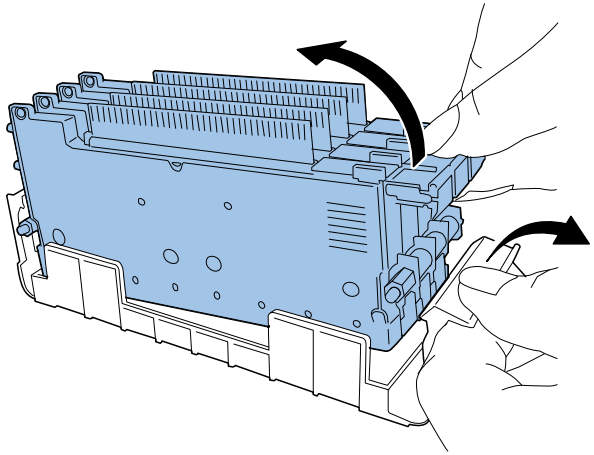

⚠ CAUTION:
Do not touch the circuit boards and Printhead face. An ink injection problem can occur.

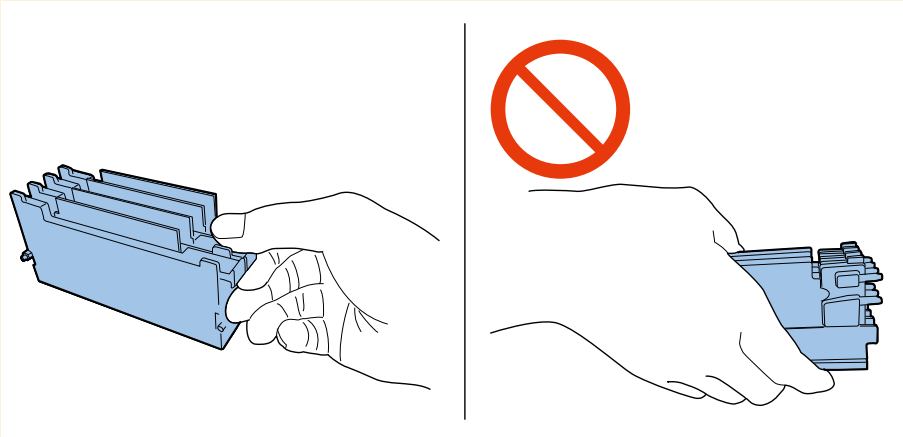

9) Put Printhead Unit on the rail guide, and then insert it into Printer until it stops.

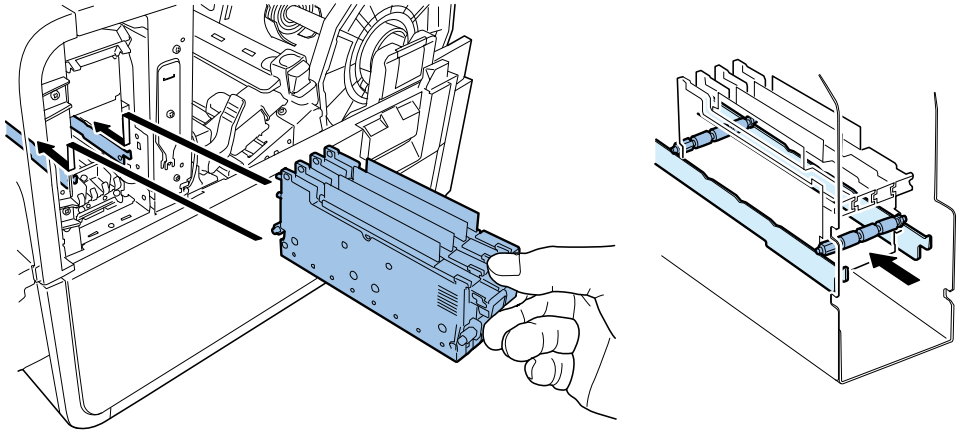

NOTE:
Skewering Shaft must be on Printhead Guide Rails.

⚠ CAUTION:
If Printhead Unit is insufficiently inserted, Lower Printhead Release Lever cannot be closed.
To confirm Printhead Unit is in the correct position, see if the end of Printhead Unit grip and the edge of the inner metal plate are in the same plane as shown in the figure.

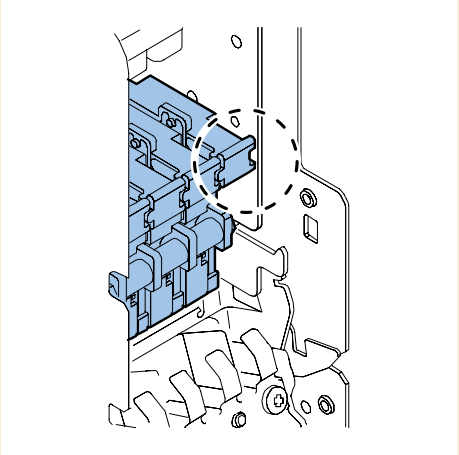

10) Mount Blade Cleaner.

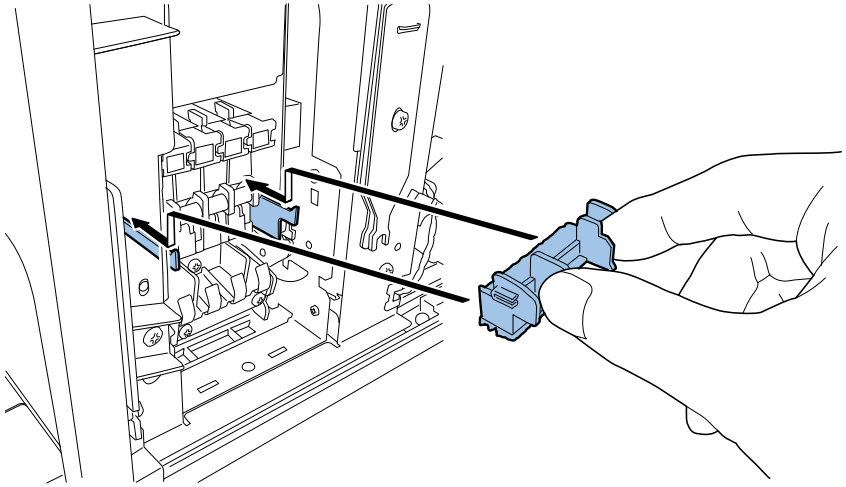

11) Close Lower Printhead Release Lever and Upper Printhead Release Lever.

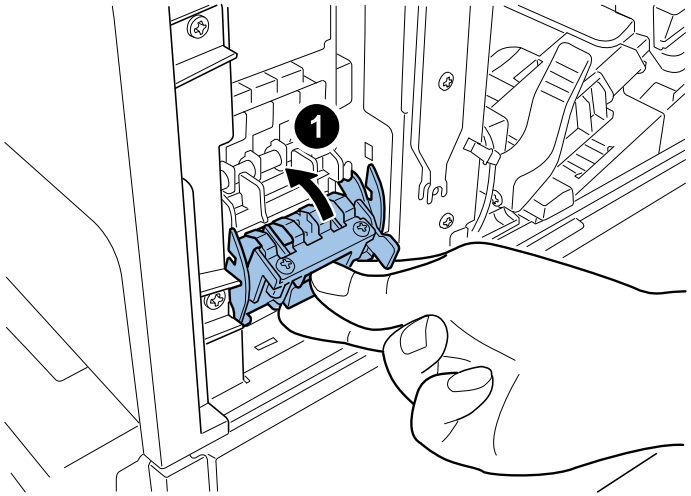

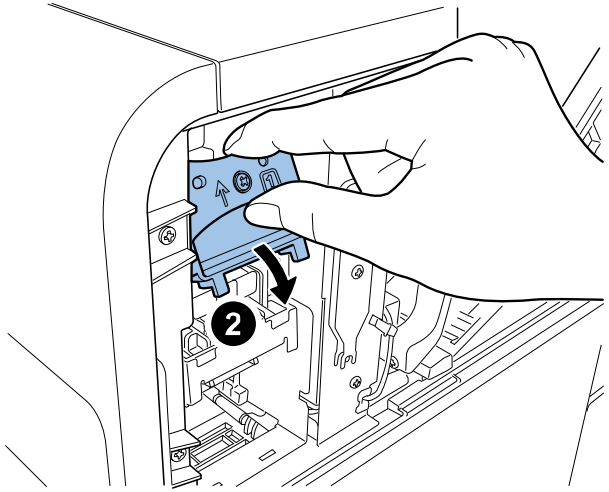

12) Check that numbers [1] , [2], and [3] indicated on Print Module are visible.

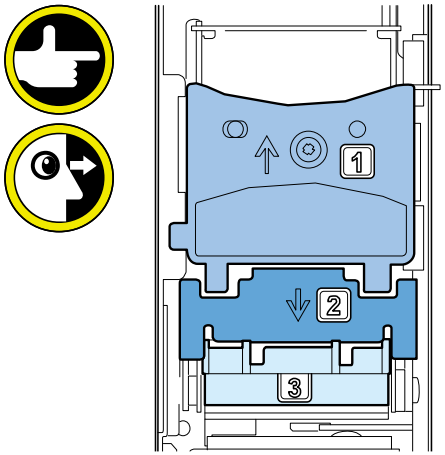

NOTE:
If any one of numbers [1] , [2], and [3] is invisible, Printhead Release Lever ([1] ,[2]) has not been closed or Blade Cleaner ([3]) has not been mounted. Follow the steps 12) and 13) again.

CAUTION:
After removing the shipping tapes, Upper/Lower Printhead Release Levers could slightly be opened and therefore confirm these levers are firmly closed as shown in the figure.

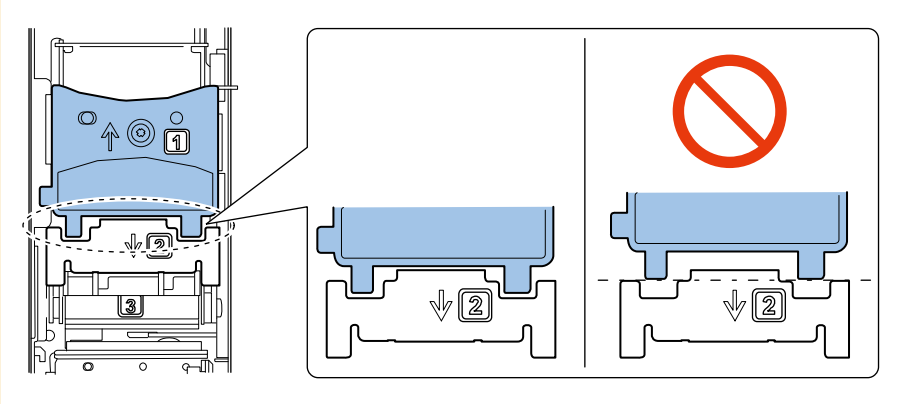

13) Attach Print Module Cover to Print Module.

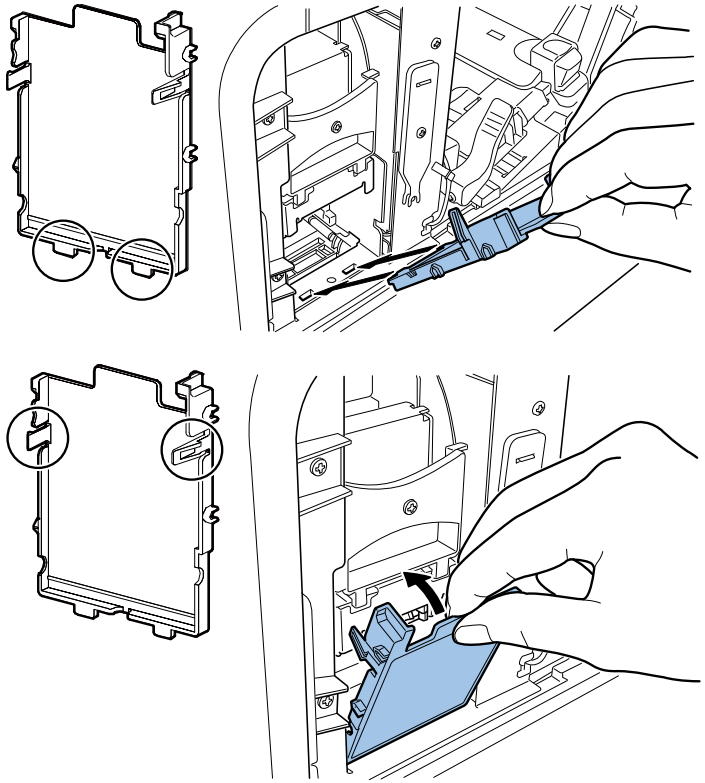

CAUTION:
- Set Print Module Cover surely.
- Confirm that claws are in the rectangular apertures.

14) Push down Upper Unit Open Lever, and then open Upper Unit.

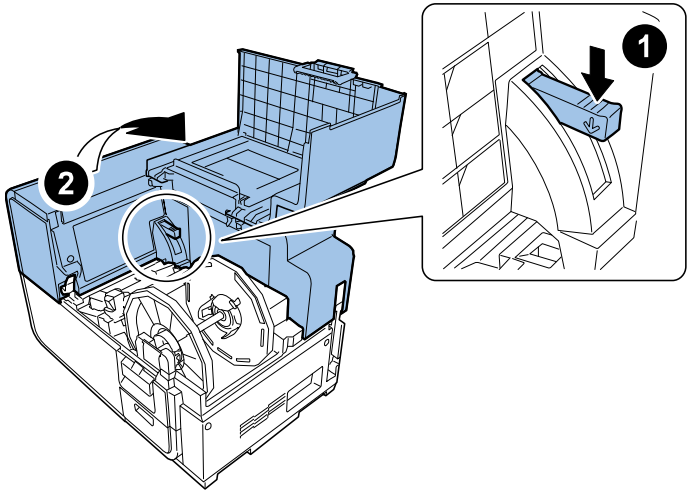

15) Mount Maintenance Cover on Upper Unit.

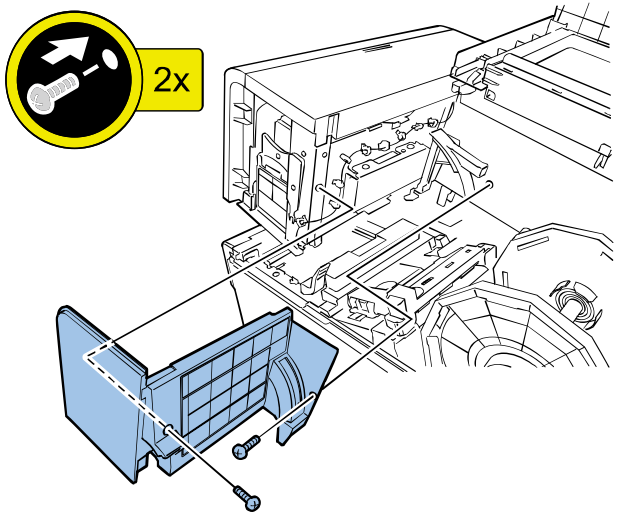

16) Close Upper Unit, and then close Roll Cover.

Loading Ink Tanks

CAUTION:
Do not shake the Ink Tank (Dye Ink).
Shaking Ink Tank makes bubbles in Ink Tank. The bubbles cause misdetection of ink remaining, and operator call error (XXXX Ink Empty/error code: 20XX) might be occur.

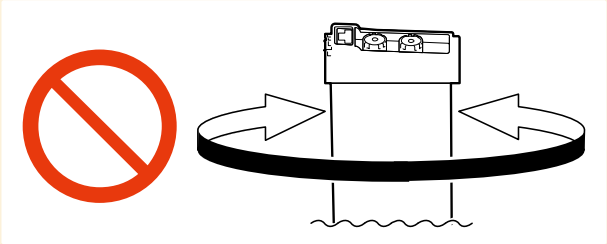

In the case shaking Ink Tank by mistake, remove it from Printer and reinstall it.

1) Open Ink Tank Door.

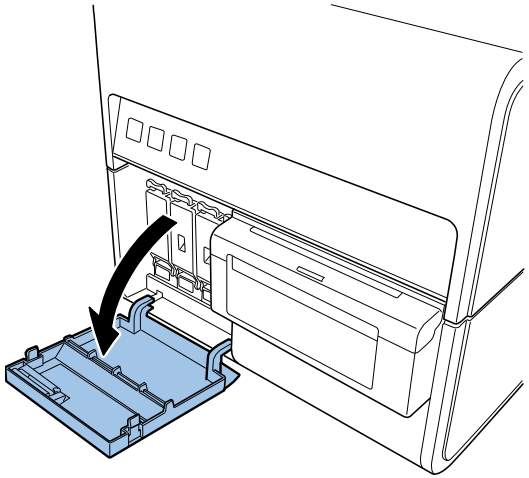

2) Open Ink Tank Lever for each color while pushing it downward.

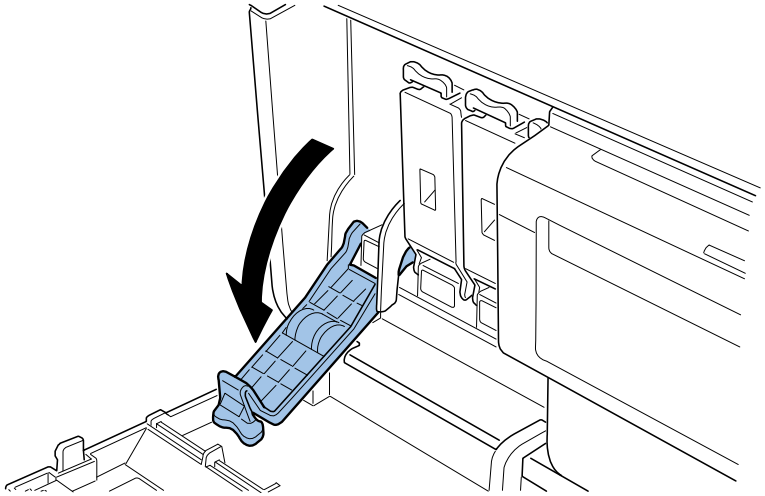

3) Take out included Ink Tanks from the packages, and then remove the cushioning materials.

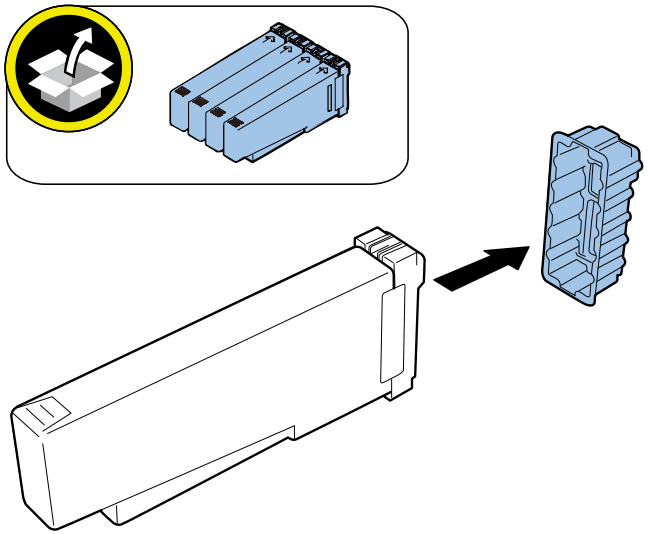

4) Slowly insert Ink Tank as far as it will go.

CAUTION:
Ink Tank cannot be loaded properly if it is inserted in a wrong Ink Tank Slot.

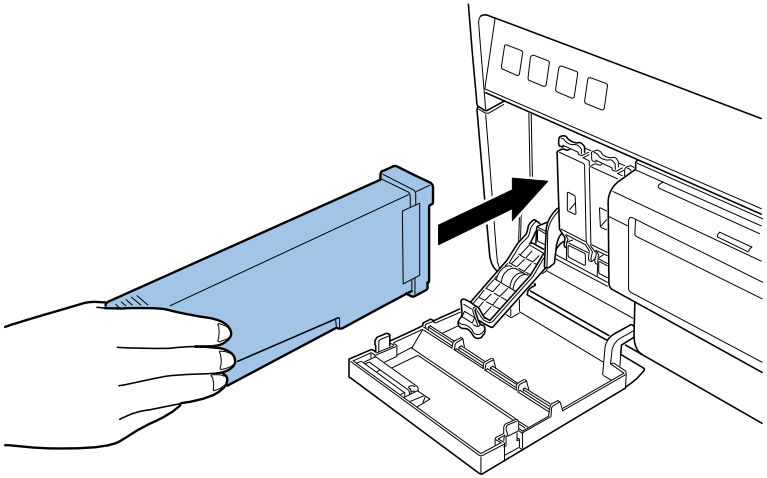

5) Close Ink Tank Lever.

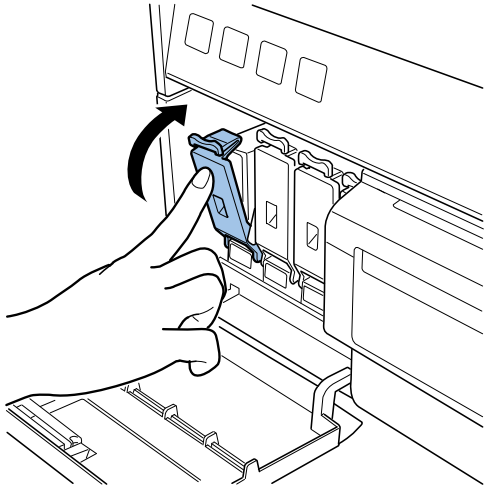

6) Set the rest of Ink Tanks and close Ink Tank Door.

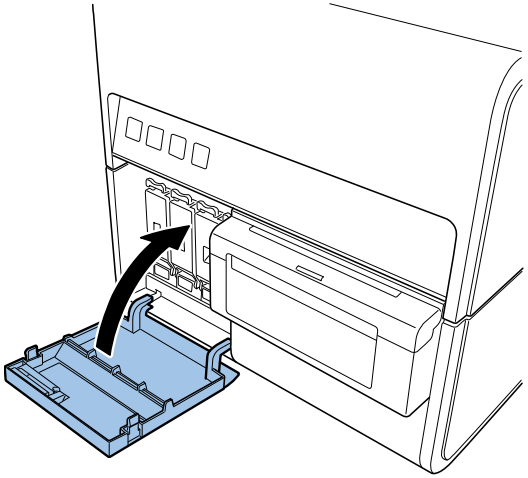

Installing Cutter Unit

In the case installing Option Cutter Unit, follow the installation procedure of Cutter Unit.

Initial Ink Loading

NOTE:
- Initial ink loading takes about 25 minutes.
- Ink loading time might be changed due to the design change.

CAUTION:
- Do not turn the power off or open covers and doors such as Roll Cover during ink loading.
- Should Power Key be switched OFF or covers be opened during ink loading, its operation will be terminated and has to be started from the beginning. In such a case, turn on the power to start ink loading again.
- Restarting the ink loading results in more ink consumption.

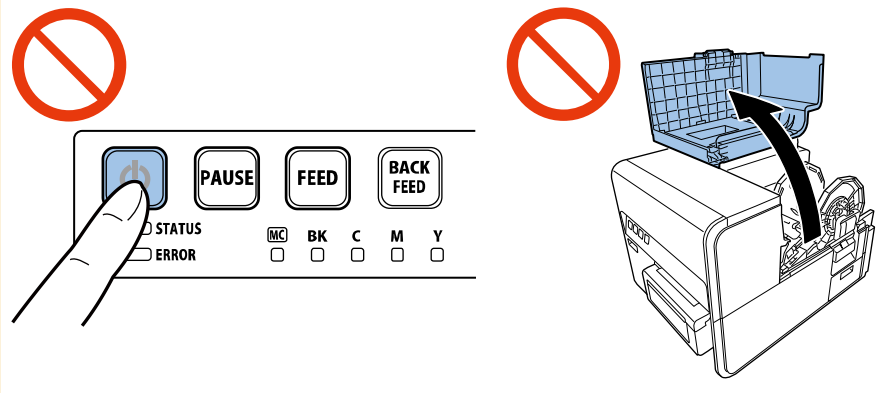

1) Connect Power Cord to Printer.

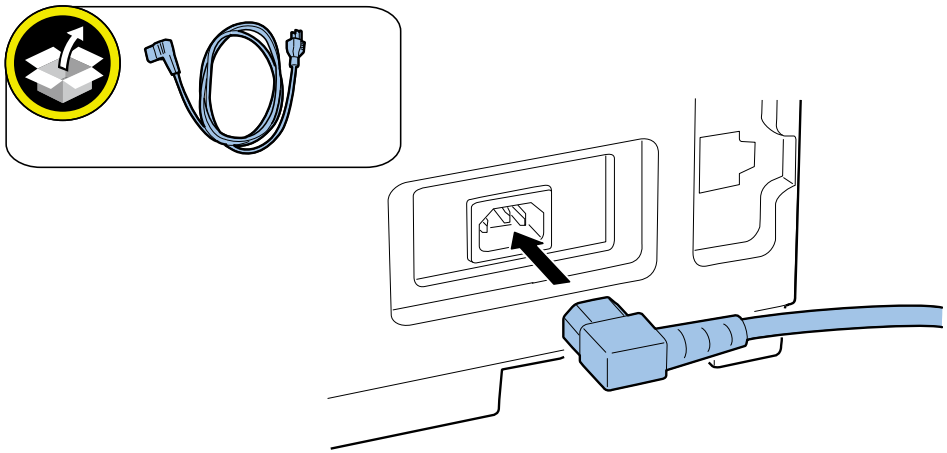

2) Connect Power Cord to the outlet.
3) Press Power key to turn the main power ON.

NOTE:
When [STATUS] Lamp changes from lighting to flashing, initial ink loading starts automatically.
When the ink loading has completed, the lamp goes back to lighting and a buzzer sounds.

CAUTION:
Ensure that [STATUS] Lamp went lighting before moving to the next step.

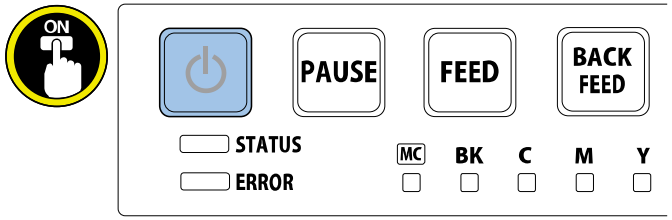

Checking after Installation

Setting of Test Label

1) Open Roll Cover and take out Roll Holder.

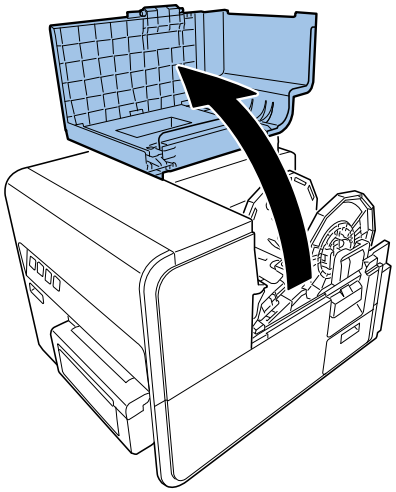

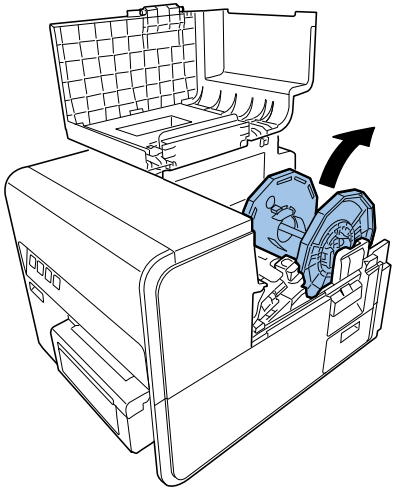

2) Open Paper Guide and Transport Guide.

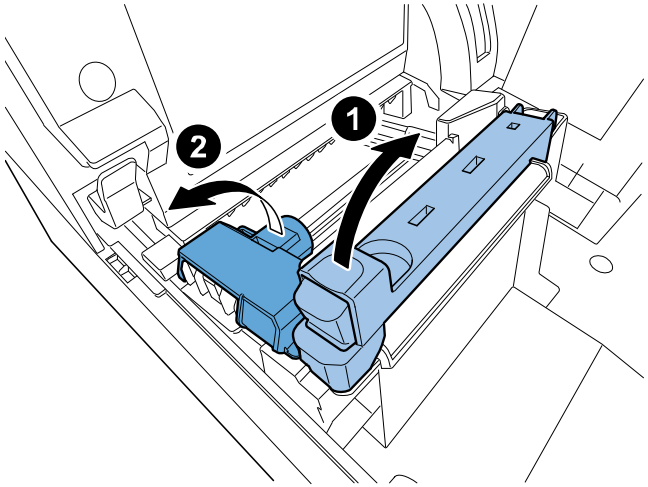

3) Insert Test Label along the left-side guide under TOF Sensor until it stops at the roller in the feeder slot.

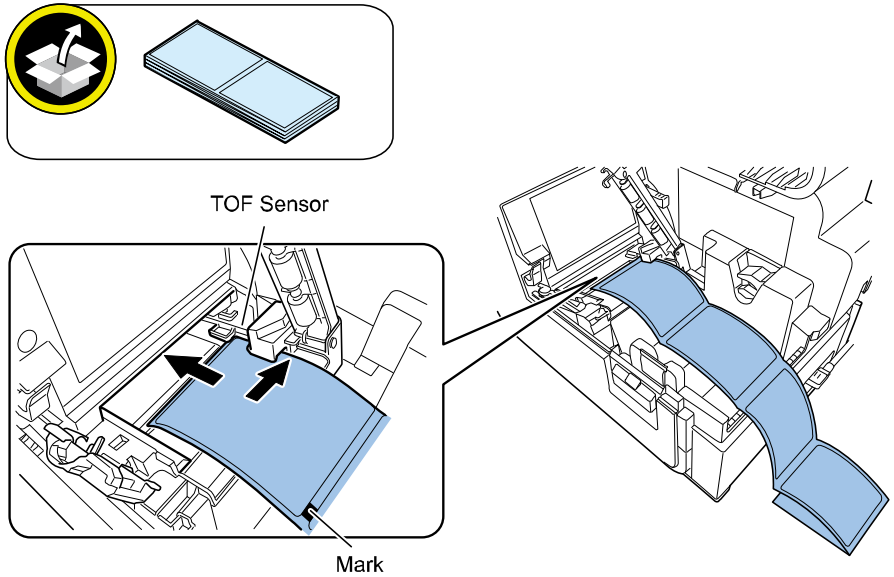

CAUTION:
Do not put Test Label inside Printer.

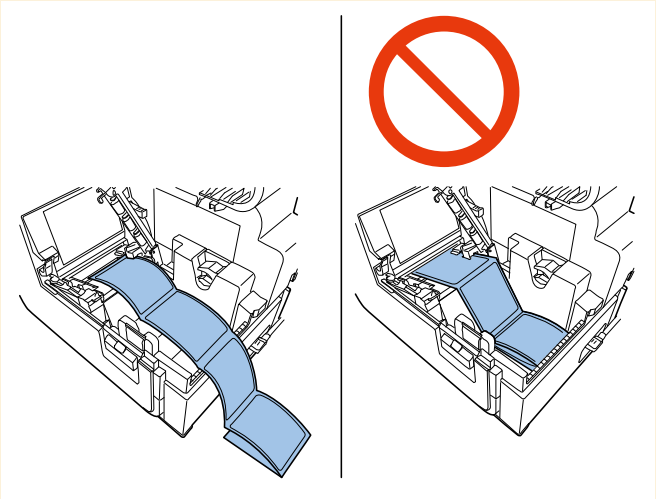

4) Slide and align Transport Guide with the paper.

NOTE:
Do not give too much stress on the paper to avoid a paper jam.

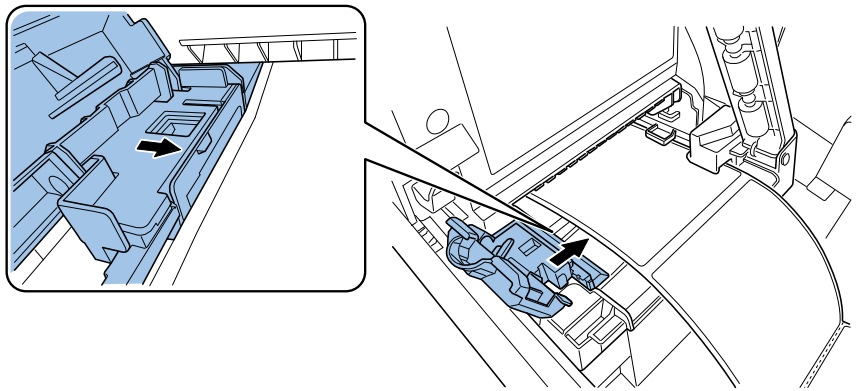

5) Slowly close Transport Guide and Paper Guide.

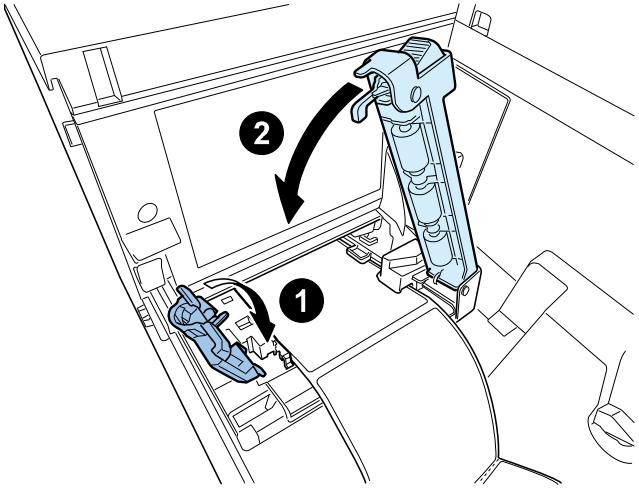

6) Close Roll Cover.

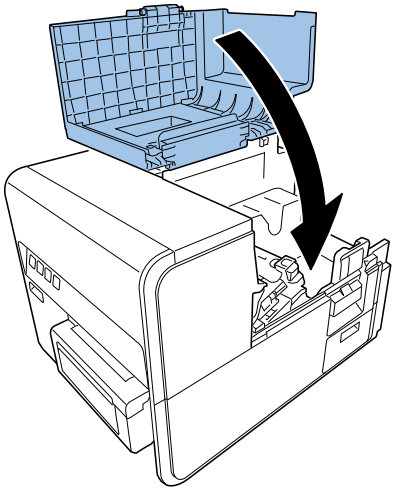

Printing and Checking a Nozzle Check Pattern

NOTE:
Nozzle Check Pattern can be printed using Service Utility.

1) Shutdown Printer as follows:
   * Press and hold Power key down.
   * Release Power key after a sound of the beep.

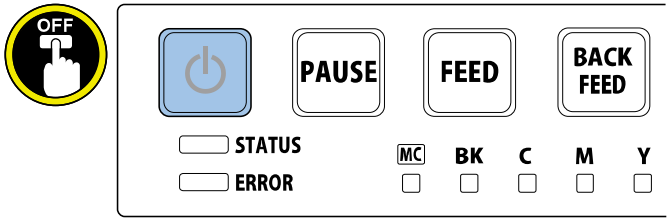

NOTE:
It takes approx. 30 sec. for the power off sequence to shutdown Printer.

2) Press Power key while holding [PAUSE] and [FEED] Keys ON simultaneously. Release Key when buzzer sounds second time.

NOTE:
- Keep pressing 3 keys down until the second buzzer sounds.
  <Timing when the buzzer sounds>
  1st time: Immediately after pressing 3 Keys.
  2nd time : 7 seconds after the first
- Check that Power lamp is repeating 3-time flash.

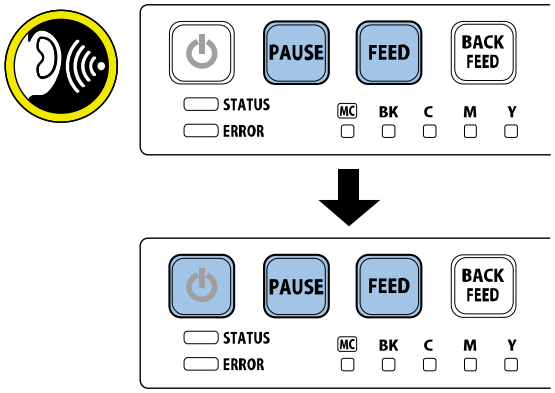

3) Press [PAUSE] Key once to enter Maintenance Mode.

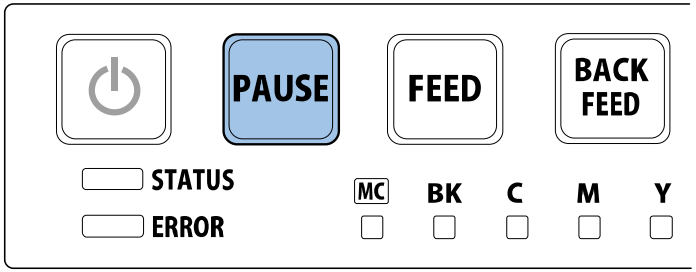

NOTE:
When Printer enters Maintenance Mode, Power lamp is repeating 4-time flash. If Power lamp is lit, hold Power key for 1 second or longer to shutdown and try again.

4) Hold [PAUSE] Key down again. Release [PAUSE] Key when the buzzer sounds 5 times. After releasing [PAUSE] Key, confirm Ink Warning Lamps of cyan (C) and yellow (Y) are lit.

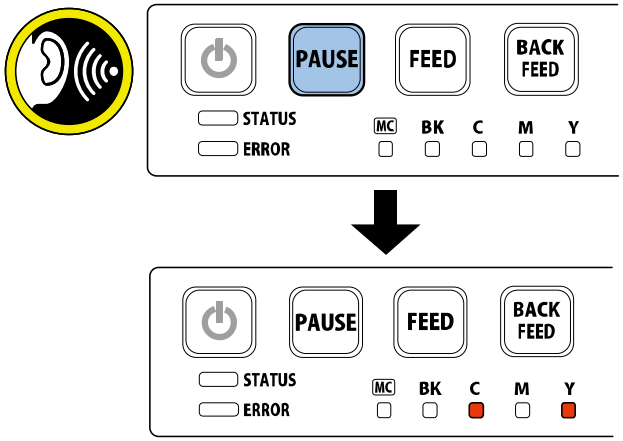

NOTE:
- Buzzer beeps every 1 sec. When [PAUSE] Key is holding pressed at Maintenance Mode.
- If a wrong function has mistakenly been selected, try again to select the Nozzle Check Pattern Printing by simply pressing [PAUSE] Key down and wait for 5 buzzer sounds.
- When Printer is left untouched for 15 sec. or more after selecting the function, the current selection is canceled and the function should be selected again with [PAUSE] Key.
- <Table 1>.

[PAUSE] Key release timing	Function to execute
Buzzer sounds once (1 second later)	Strong cleaning
Buzzer sounds twice (2 seconds later)	Initial ink loading
Buzzer sounds 3 times (3 seconds later)	Shipping the printer
Buzzer sounds 4 times (4 seconds later)	Printhead replacement
Buzzer sounds 5 times (5 seconds later)	Nozzle check pattern printing
Buzzer sounds 6 times (6 seconds later)	Setting value printing
Buzzer sounds 7 times (7 seconds later)	Printhead moving to print position
Buzzer sounds 8 times (8 seconds later)	Not to execute
9 seconds or more later (no buzzer)	Not to execute (no buzzer)

5) Press [PAUSE] Key once. A Nozzle Check Pattern is printed.

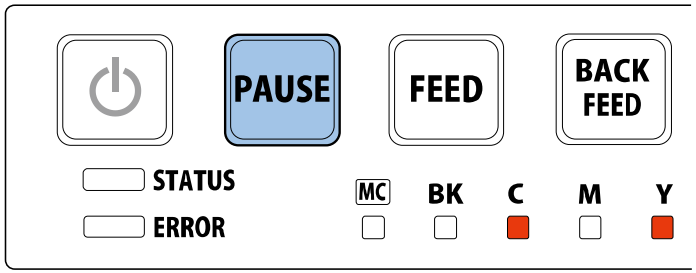

NOTE:
- To cancel the operation after executing some function, press Power key for 1 sec. or more to shutdown.
- If "Shipping the printer" or "Printhead replacement" is mistakenly executed, ink drainage is executed. In such the cases, turn off the power and enter Maintenance Mode again. Then load ink manually and execute Nozzle Check Pattern printing.

6) When the Optional Cutter Unit is not installed, open Cutter Cover and slide the cutter to cut the paper.

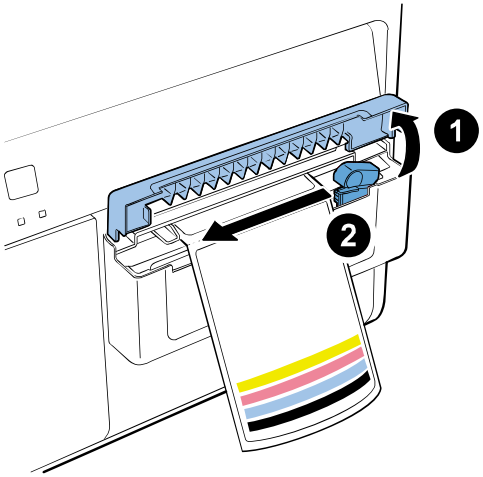

When Optional Cutter Unit is installed, the paper is automatically cut.

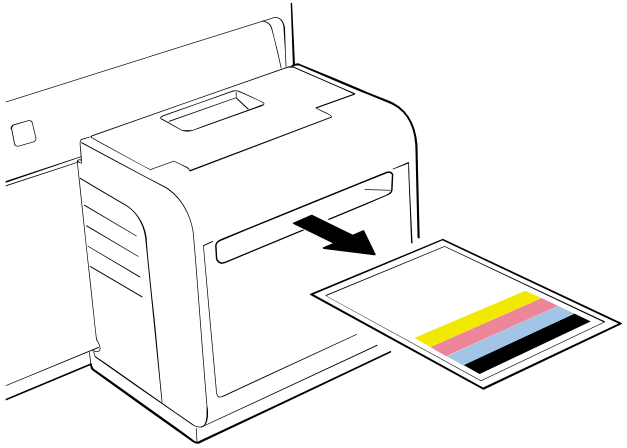

7) Observe printed Nozzle Check Pattern. In the case that white streak is in solid printed area, execute strong cleaning once. Refer to the table 1 in step 4.

NOTE:
- Strong cleaning takes approx. 8 min.
- In the case that the white streak is only in the hatched area, not in the solid printed area, strong cleaning is not required.
- Strong cleaning can also be executed using Service Utility.

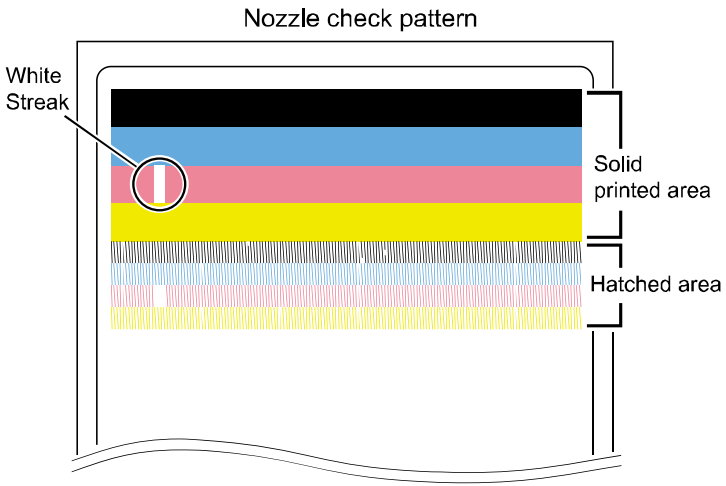

8) Confirm that the white streak has been eliminated.

NOTE:
If there is still white streak remaining after the strong cleaning, clean the printhead face referring to "Cleaning Procedure of Printhead Face."

9) Shutdown Printer as follows:
* Press and hold Power key down.
* Release Power key after a sound of the beep.

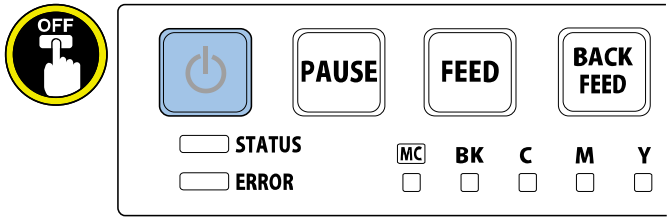

NOTE:
It takes approx. 30 sec. for the power off sequence to shutdown Printer.

Cleaning Procedure of Printhead Face

1) Open Roll Cover.

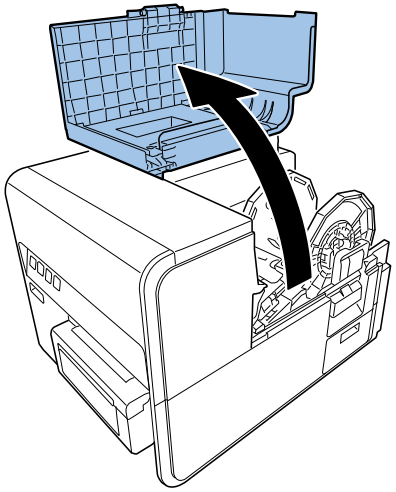

2) Open Paper Guide.

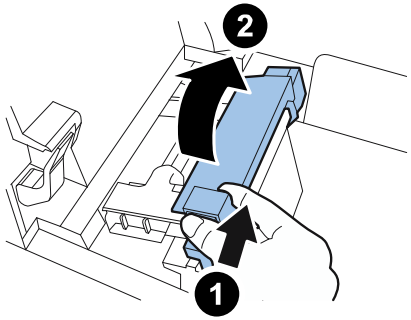

3) Open Transport Guide and slide it in the arrow direction.

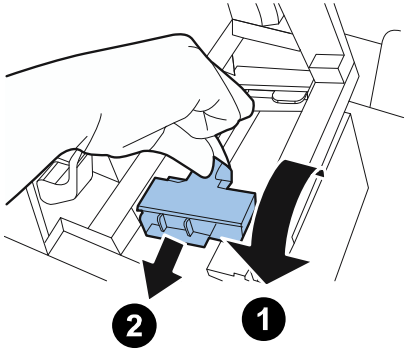

4) While pressing Jam Release Lever down, pull out paper.

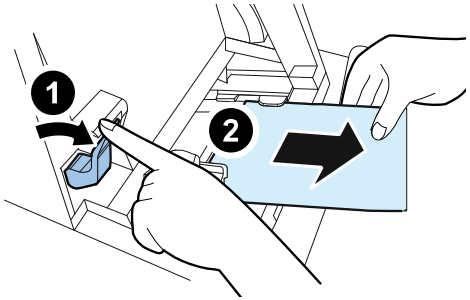

5) Close Roll Cover.

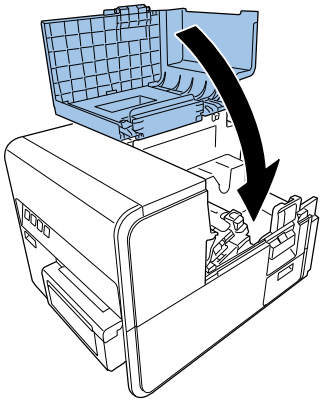

6) Refer to the table 1 in step 4 of "Printing and Checking a Nozzle Check Pattern" to move Printhead to the print position.

CAUTION:
Do not keep Printhead at print position for a long time.

NOTE:
It takes approx. 5 sec. that Printhead comes to the print position.

7) Open Upper Unit.

8) Place the Nozzle Check Pattern as shown in the figure.

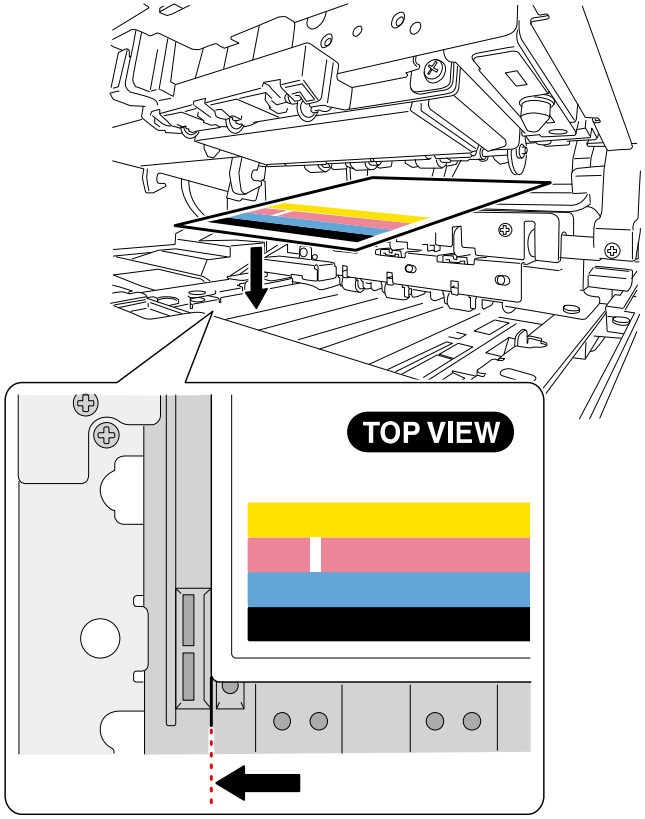

9) Identify the position of non-discharging nozzle(s) depending on the corresponding position of the white streak(s).

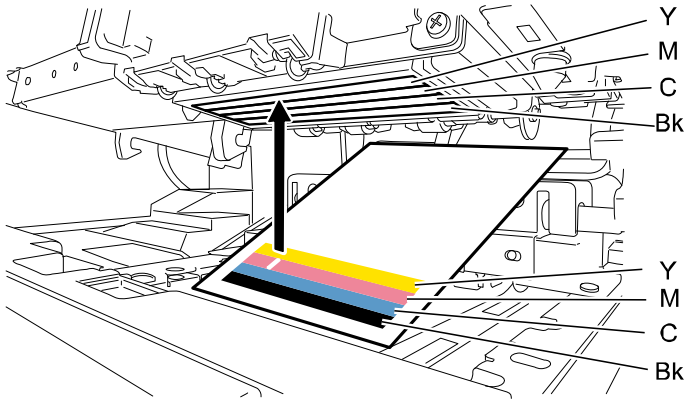

10) Put the cleaning stick on the nozzles for approx. 5 sec. to have it soaked with ink.

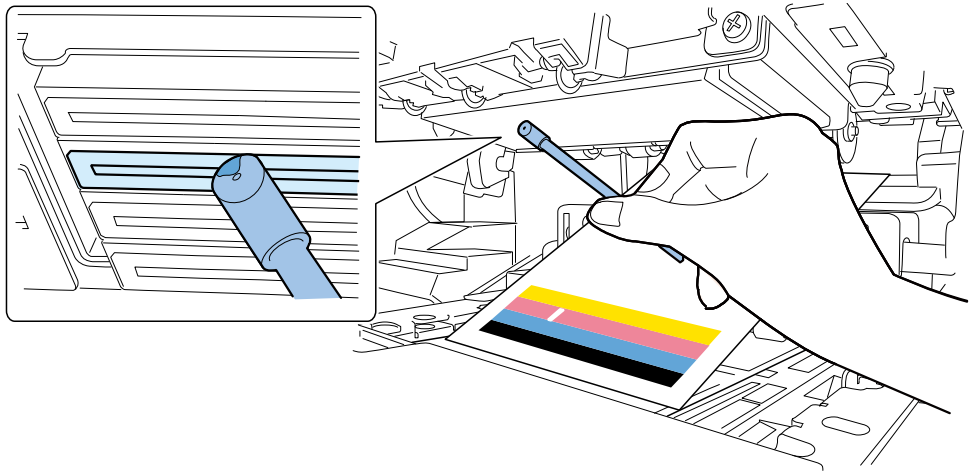

CAUTION:
Do not have the cut surface contact the Printhead face.

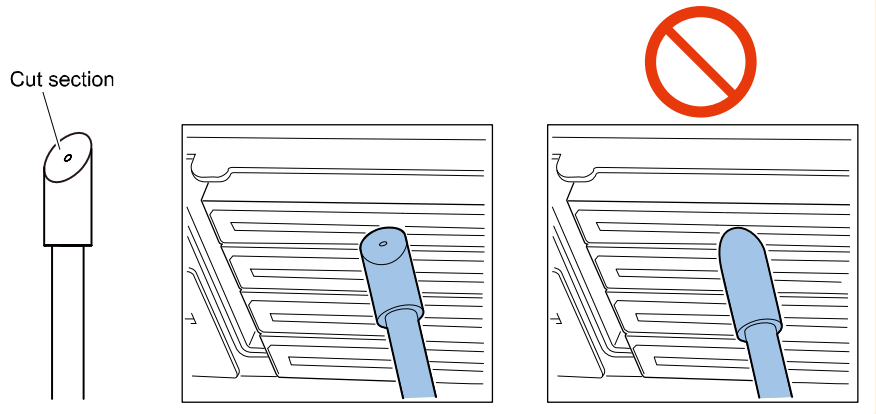

NOTE:
1 Cleaning Stick covers all the 4 colors of Printhead for the cleaning. Cleaning Printheads for different colors with the same Cleaning Stick does not affect the quality of printed colors.

11) Confirm that ink is absorbed in the tip of Cleaning Stick. Then wipe off Printhead surface from front to rear several times.

CAUTION:
- Do not wipe the face of Printhead too hard. Wiping the surface too hard may cause damage on the printhead.
- Never touch the Printhead surface. Fatal damage may result on it.

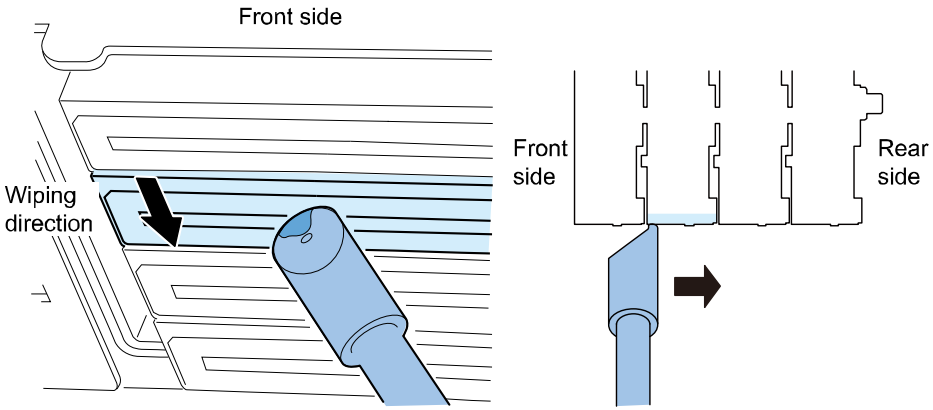

12) Remove Nozzle Check Pattern.

13) Close Upper Unit and print the Nozzle Check Pattern again to check if the white streak is eliminated.

14) Shutdown Printer as follows:
* Press and hold Power key down.
* Release Power key after a sound of the beep.

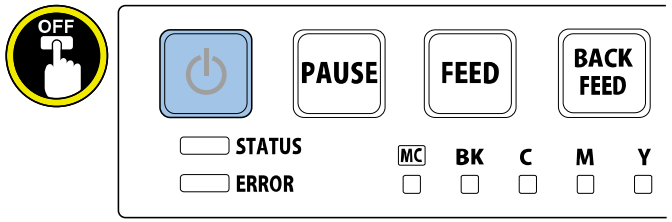

NOTE:
It may take 30 sec. or more for shutdown sequence after releasing the Power key.

Confirmation of Printhead Position

Confirm that the relative mis-registrations among different colors are not observed in printed image. If there should be the mis-registration, adjust Printhead positions via Service Utility or Printer Driver.

Printer Transport Work

Overview

Printer is filled with ink in its Ink Supply System, Imaging System and elsewhere. Implement items suggested below thoroughly and explain to customers fully to prevent ink spills in or outside Printer or to avoid unexpected failures when Printer is transported.

Relocating on Same Floor or in Same Building

Execute [Moving the printer] to clean (suction) remaining ink in Purge Unit to prepare for relocation using Printer Driver or Service Utility.

Set the Indoor Transport Preparation

- Printer Driver > [Printer Properties] > [Utility]
- Service utility > [Cleaning] > [Preparation before transportation] > [Moving the printer]

Long Distance Relocation

Execute [Moving the printer] from Printer driver or Service utility or Standalone mode to return ink from Print Module to Ink Tanks for drainage to prepare for relocation. Because Printer needs to be properly packed before it can be relocated long distance, User's Guide recommends that users contact dealer beforehand.

Set the Transport Preparation

- Printer Driver > [Printer Properties] > [Utility]
- Service Utility > [Cleaning] > [Preparation before transportation] > [Shipping the printer]
- Maintenance Mode > [Transport Preparation]

Packing Procedure for Long Distance Relocation

CAUTION:
- Remove Ink Tanks and paper before long distance relocation.
- Attach cushioning materials that were removed at Printer installation to transport area when Printer is relocated long distance.

Follow the procedure below to pack Printer before long distance relocation.
1) Remove the paper in Printer after draining the ink by [Shipping the printer].
2) Set cleaning towel on Transport Unit as following figure.

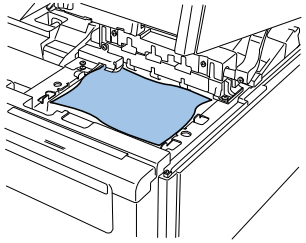

3) Set cushioning materials to Printer as following figure.

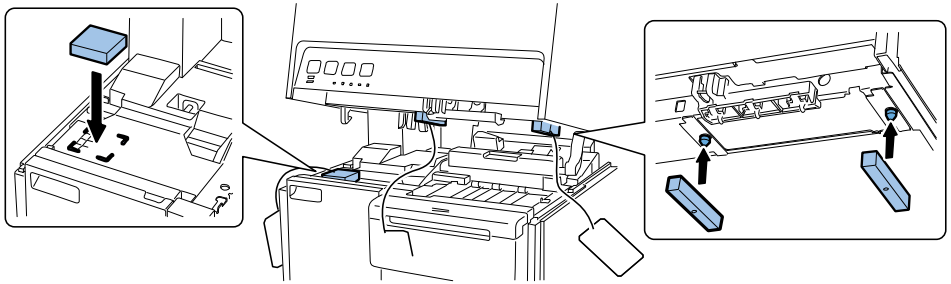

4) Put Ink Tanks and Power Cord in the accessory box. Cover printer with plastic bag and pack Printer as following figure.

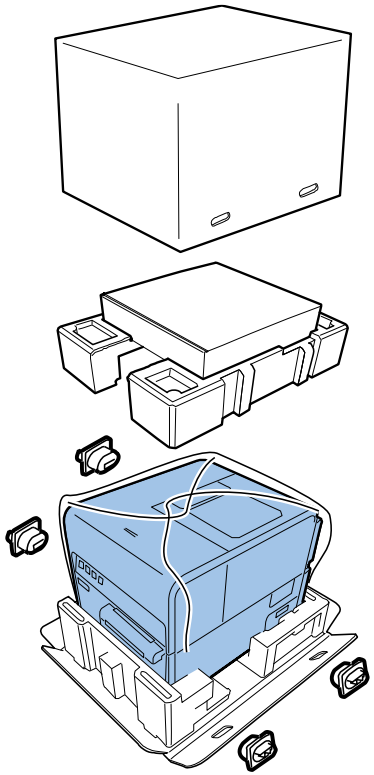

CAUTION:
Reinstalling Printer after long distance relocation, remove cleaning towel on Transport area before turning on the power.

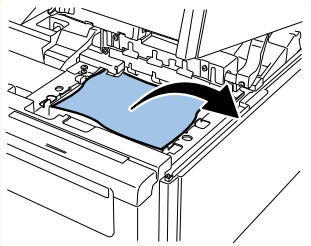

■ Shipping Preparation When Printer Is in Trouble

Shipping Preparation When Printer Is in Trouble.

1) Carry out the following mode using Service Utility.
   - Service Utility > [Cleaning] > [Preparation before transportation] > [Shipping the Defective Printer]

2) Move Print Module to left side of Printer.

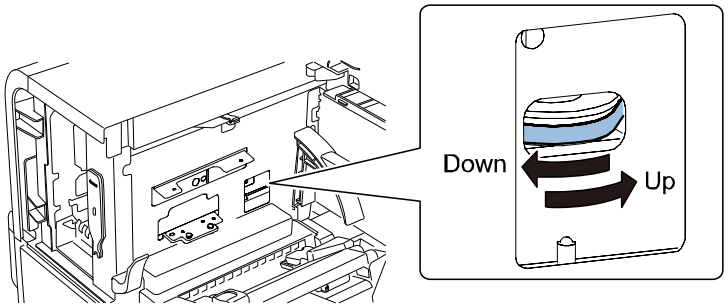

3) Remove Purge Unit.
4) Pull base plate of Purge Unit forward.
5) Install Purge Unit.
6) Move Printhead to capping position.
7) Remove Ink Tanks and put cleaning towel to needles of Ink Tank Holder Unit.
8) Remove print paper from Printer.

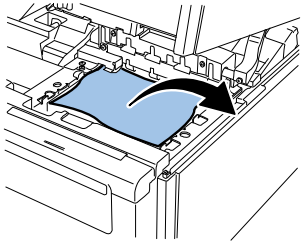

9) Take the steps 3) to 5) of long distance relocation.

CAUTION:
When covering Printer with a plastic bag, put absorbent towel around Printer to prevent ink from scattering.

7. Appendix

Exclusive Service Tools

Service Exclusive Tool List

In addition to the standard tools set, the following exclusive tools are required when servicing Printer.

Tool name	Tool No.	Rank (*)	Shape	Uses/Remarks
Cleaning stick (12 pcs/set)	98-0790165-00LF	A	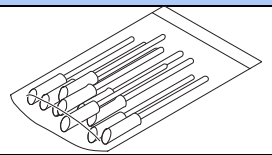	• Cleaning of face of Printhead (during installation)
Cleaning Towel (100 pcs/set)	98-0790164-00LF	A	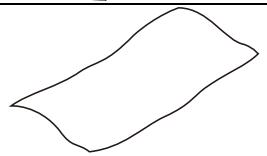	• Cleaning the inside of the printer or wiping up spilled ink.
Test Label (4×5 in label) (20 sheet / set)	98-0790166-00LF	A	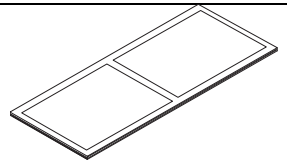	• Test printing
Printhead Replace Tool	98-0790086-00LF	-	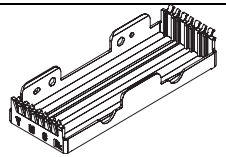	• Standard part of Printer • Printhead replacement
Wrench	98-0790059-00LF	-	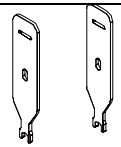	• Standard part of Printer • Printhead replacement
Tube	98-0790087-00LF	-	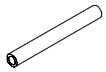	• Standard part of Printer • Printhead replacement
Clear ink		A	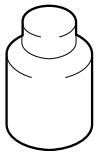	• Cleaning of face of Printhead

Meaning of (*)A - C
A: Each service engineer is expected to carry one.
B: Each group of 5 service engineers is expected to carry one.
C: Each workshop is expected to carry one.

General Circuit Diagram

General Circuit Diagram (1/3)

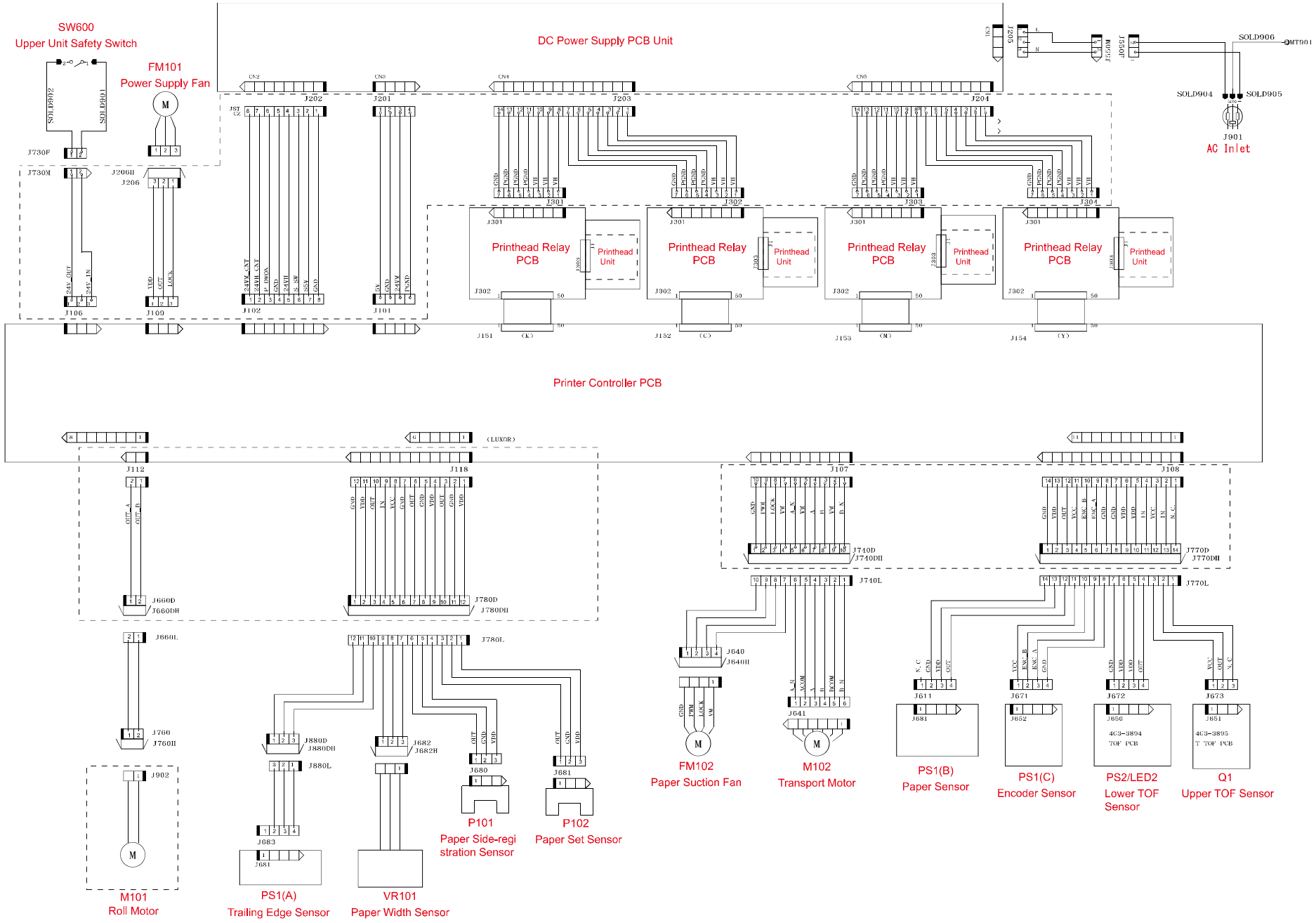

General Circuit Diagram (2/3)

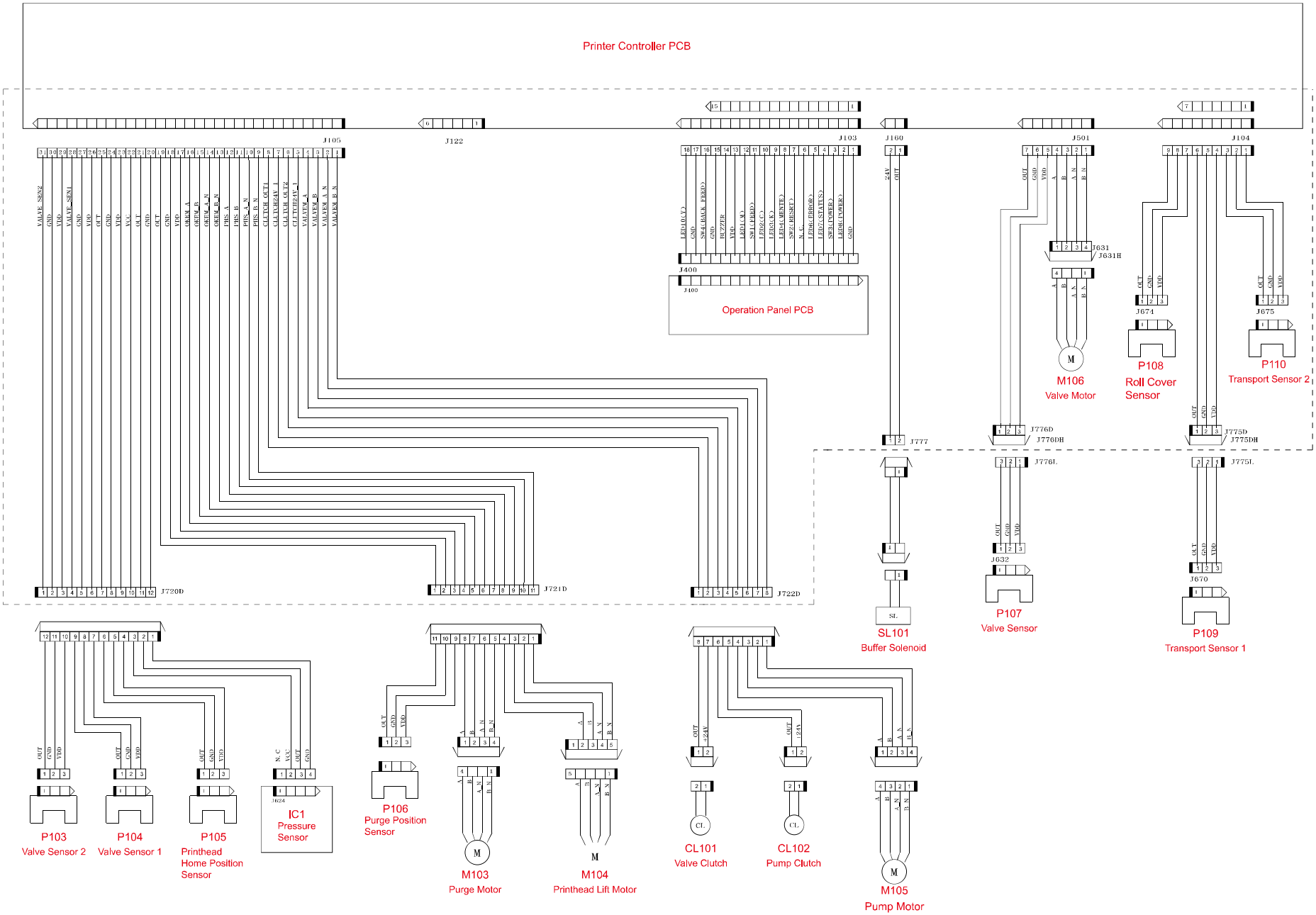

General Circuit Diagram (3/3)

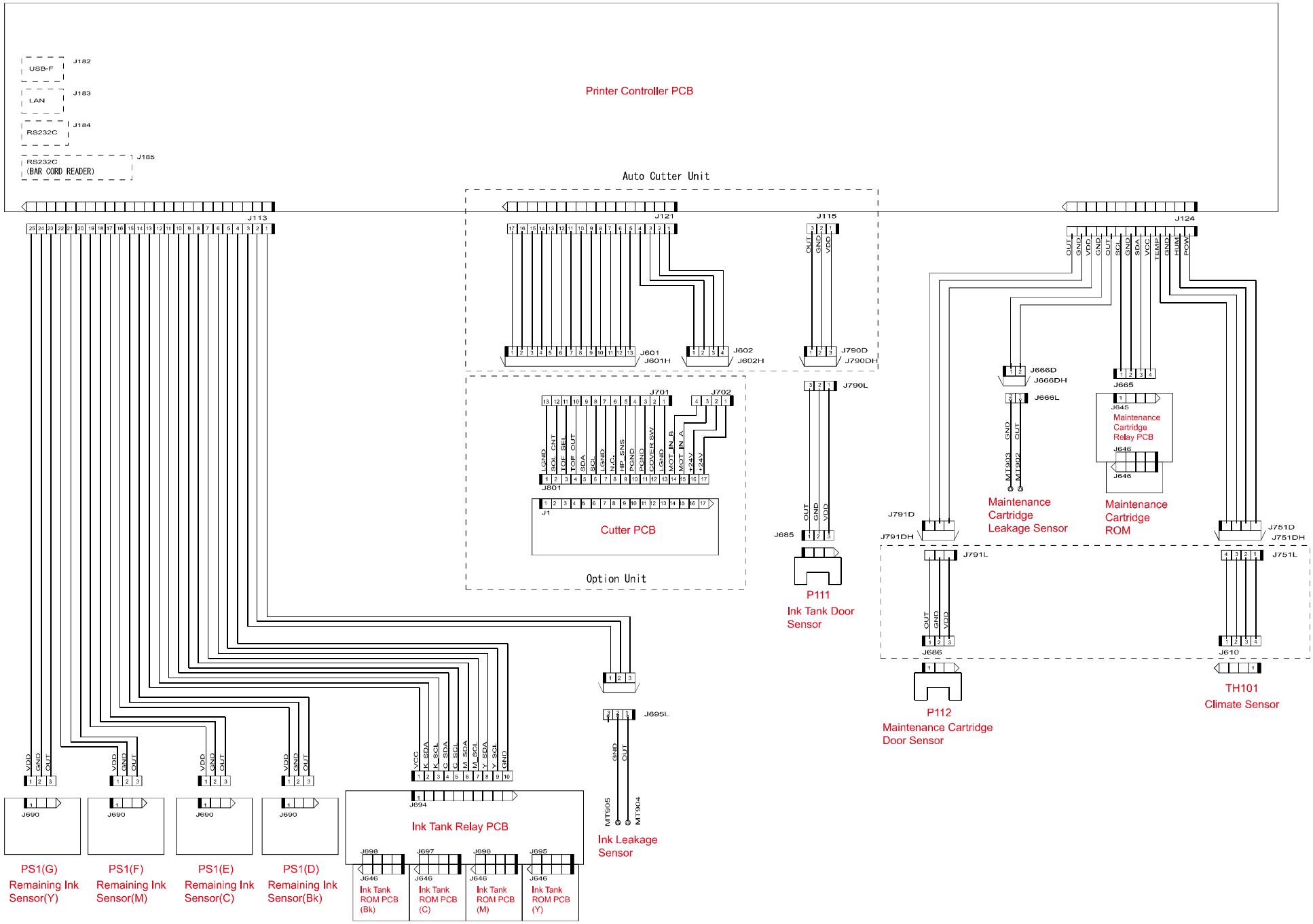

TSC Auto ID Technology Co., Ltd.

Corporate Headquarters
9F., No.95, Minquan Rd., Xindian Dist.,
New Taipei City 23141, Taiwan (R.O.C.)
TEL: +886-2-2218-6789
FAX: +886-2-2218-5678
Web site: www.tscprinters.com
E-mail: printer_sales@tscprinters.com
tech_support@tscprinters.com

TSC Auto ID Technology America Inc.
3040 Saturn Street Suite #200
Brea, CA 92821 (U.S.A.)
TEL: +1 657 258 0808
Technical Support TEL: +1 657 220 7995
FAX: +1 657 258 0809
E-mail: americas_sales@tscprinters.com
tech_support@tscprinters.com

TSC Auto ID Technology EMEA GmbH
Georg-Wimmer-Ring 8b
85604 Zorneding (Germany)
TEL: +49 (0) 8106 37979 00
FAX: +49 (0) 8106 37979 05
Web site: www.tscprinters.com
E-mail: emea_sales@tscprinters.com
tech_support@tscprinters.com